# MFX 511 QI

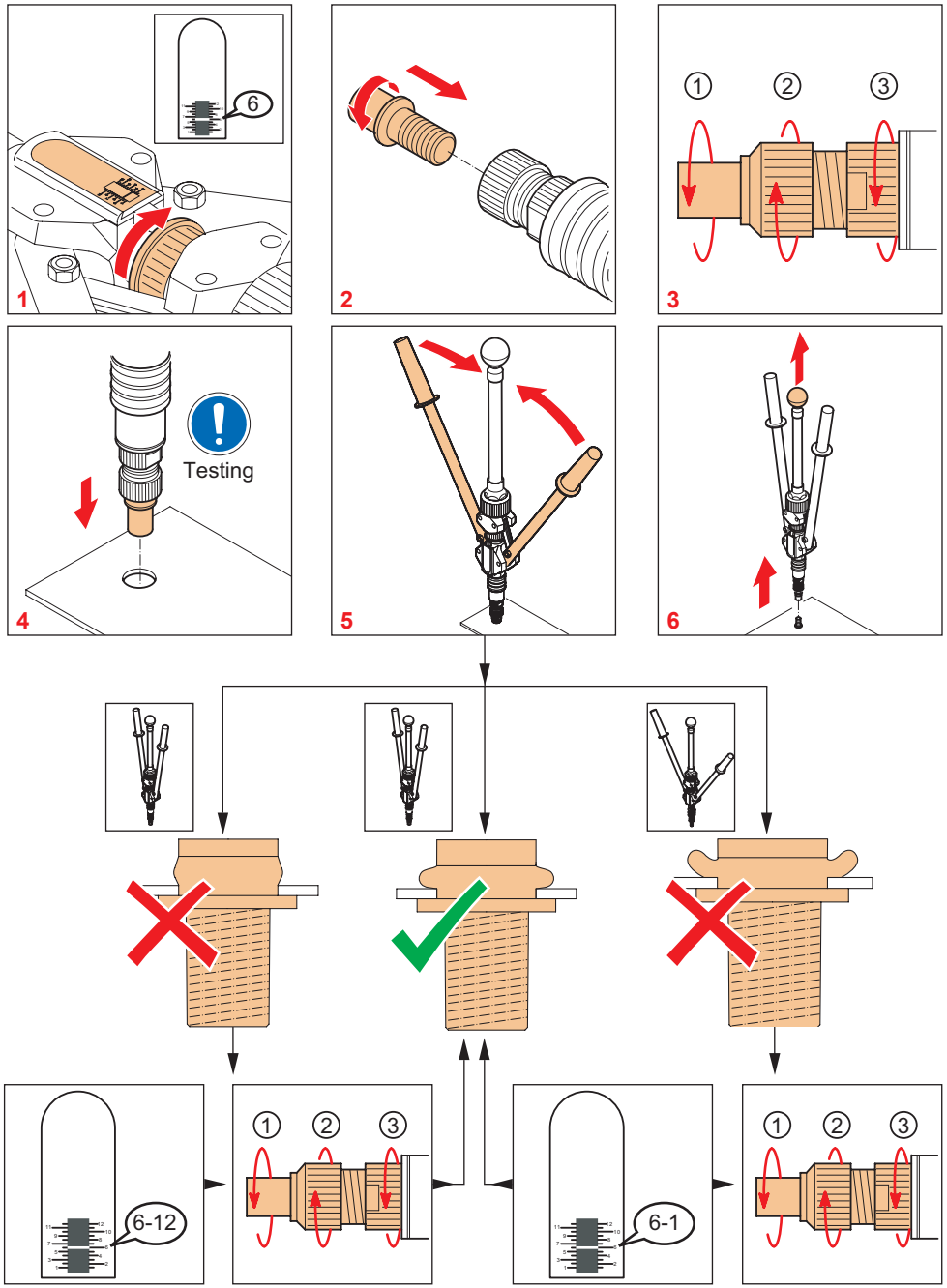




# MFX 511 QI

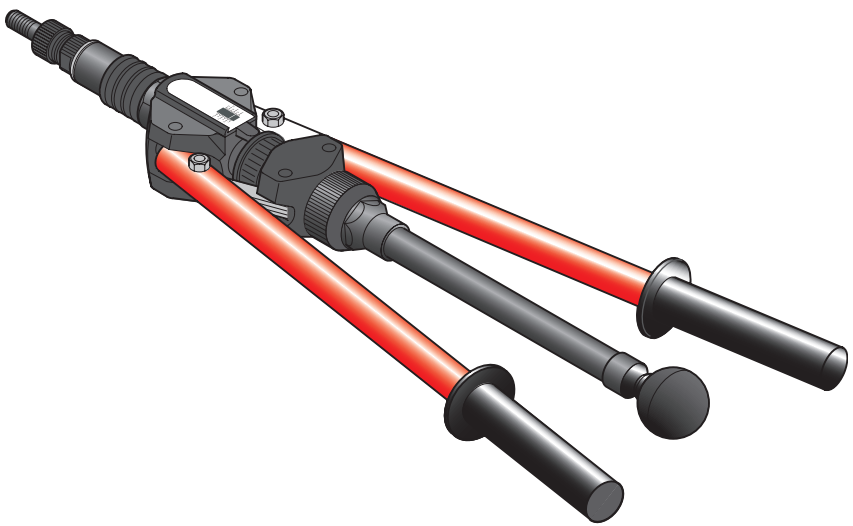

| Capacity in steel | | | |
|---|---|---|---|
| M5 | 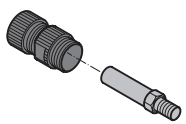 | M5<br>10-24<br>10-32 | 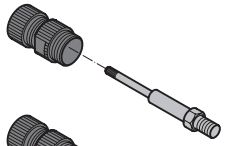 |
| M6 | 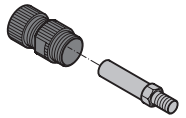 | M6<br>1/4-20 | 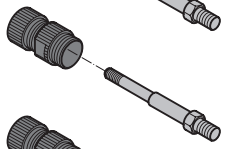 |
| M8 | 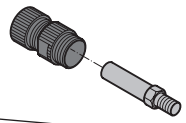 | M8<br>5/16-18 | 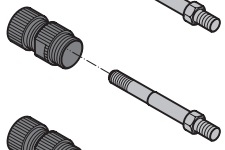 |
| | | M10<br>3/8-16 | 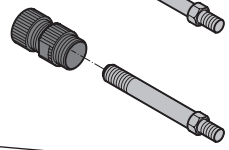 |
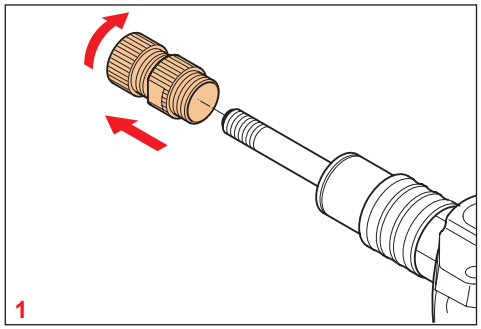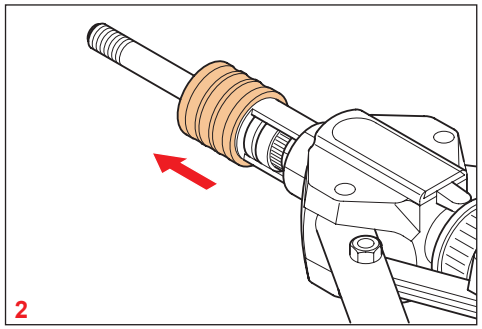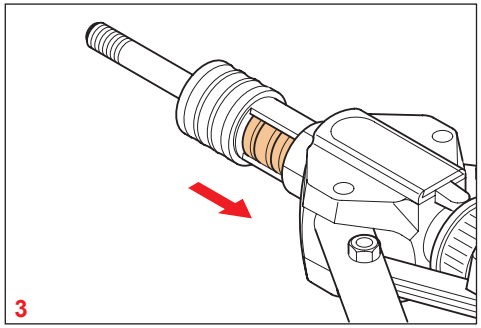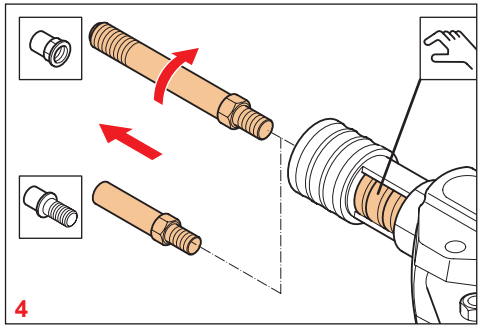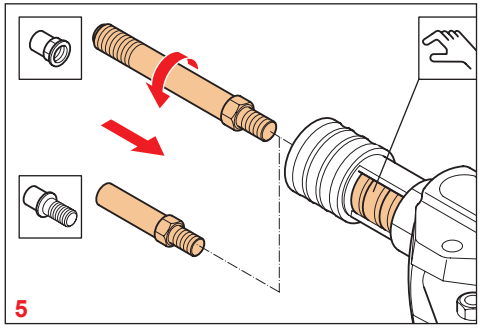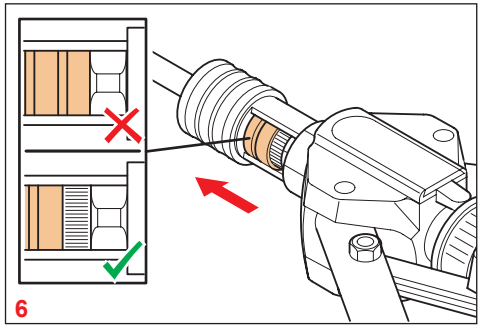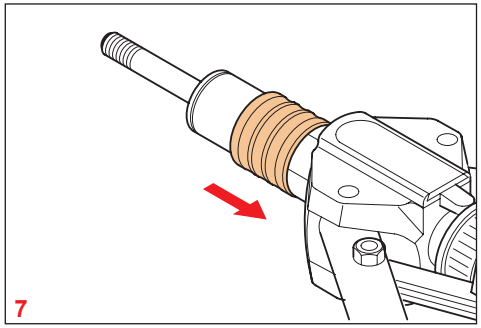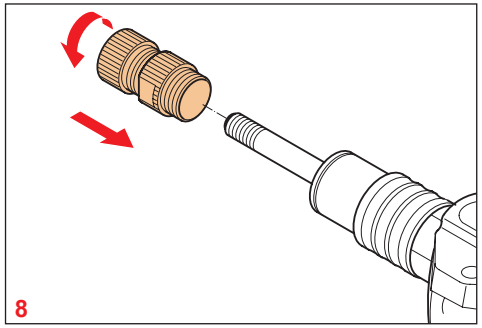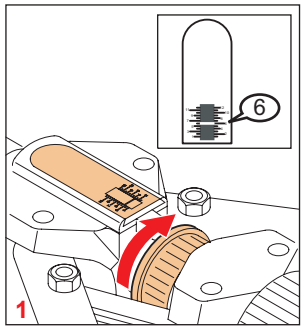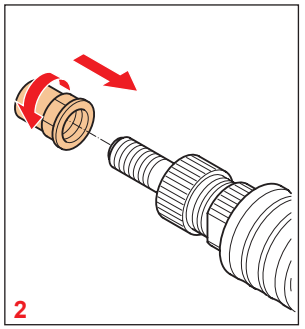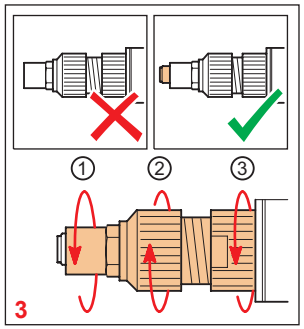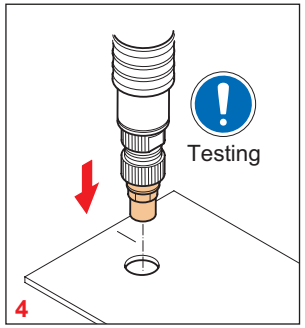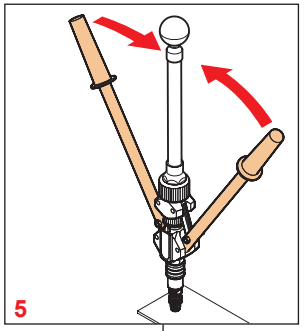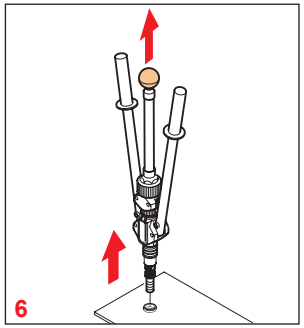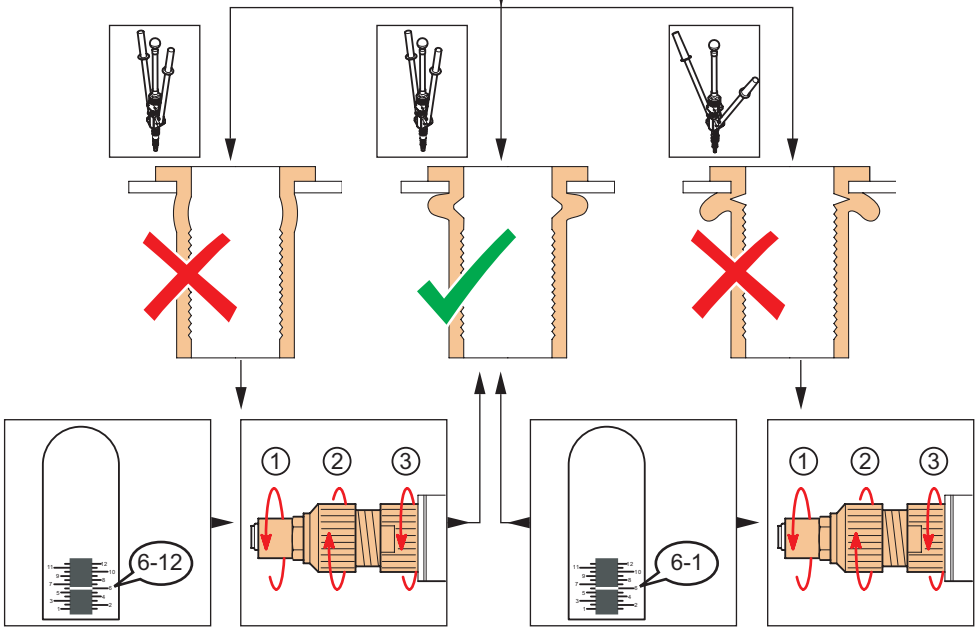
# MFX 511 QI