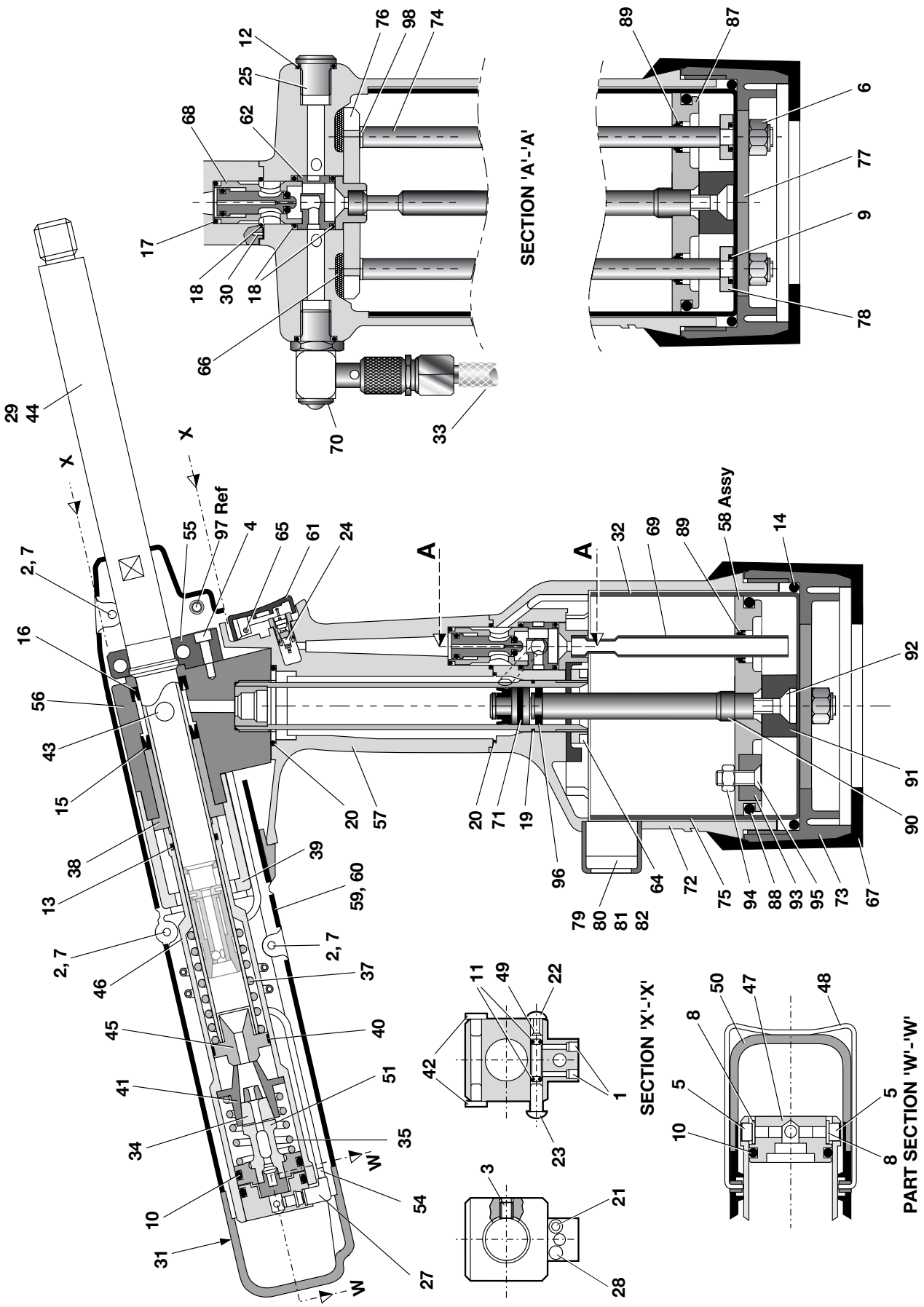

Компания АЙРИВЕТ
ООО "АЙ-РИВЕТ"
www.irivet.ru
Тел: +7 (495) 135 4201
Тел: +7 916 922 6789
Почта: order@irivet.ru

07537-00200 PARTS LIST

ITEM	PART Nº	DESCRIPTION	QTY	SPARES	ITEM	PART Nº	DESCRIPTION	QTY	SPARES	ITEM	PART Nº	DESCRIPTION	QTY	SPARES
01	07001-00223	M4 x 5 LONG SKT HD GRUB SCREW	2	-	41	07530-00208	JAW HOUSING	1	-	81	71221-20103	MOULD RETAINING NUT	2	-
02	07001-00401	M4 x 10 LONG SKT HD CAP SCREW	3	-	42	07530-00310	BLANKING PLUG	2	-	82	71221-20105	MODIFIED COUNTER	1	-
03	07001-00404	M5 x 6 LONG SKT HD SET SCREW	1	-	43	07530-0O500	BLEED PLUG Assembly [Items 83 to 86]	1	-	83	07003-0O142	BONDED SEAL	1	1
04	07001-00445	M4 X 15 LONG SKT HD CAP SCREW	1	-	44	07530-02201	BARREL	1	-	84	07003-00194	BONDED SEAL	1	1
05	07001-00504	M4 X 6 LONG SKT HD CAP SCREW	2	2	45	07530-02205	BARREL PLUG	1	-	85	07001-00442	SCREW	1	-
06	07002-00108	M6 NYLOK NUT	2	-	46	07530-02207	TAIL JAW CYLINDER	1	-	86	07530-00501	PLUG	1	-
07	07002-00134	M4 HEX NUT	3	-	47	07530-02213	REAR PLUG	1	-	87	71211-03201	PISTON	1	-
08	07002-00153	M4 WASHER (PLASTIC)	2	-	48	07530-02220	CLIP	1	-	88	07003-00280	'O' RING	1	1
09	07003-00027	'O' RING	2	-	49	07530-02302	AIR TAIL JAW SPOOL	1	-	89	07003-00274	SEAL/WIPER	3	-
10	07003-00113	'O' RING	2	2	50	07530-02603	END CAP	1	-	90	71211-03202	INTENSIFIER ROD	1	-
11	07003-00121	'O' RING	2	2	51	07530-02800	TAIL JAW PISTON ASSEMBLY	1	-	91	07537-00501	SPACER	1	-
12	07003-00127	'O' RING	1	-	52	07537-00201	LABEL (NOT SHOWN)	2	-	92	07001-00411	M6x25 C'SK HEAD SCREW	1	-
13	07003-00167	'O' RING	1	1	53	07537-00202	LABEL (NOT SHOWN)	1	-	93	07007-01993	CENTRE POLE MAGNET	1	-
14	07003-00418	'O' RING	2	-	54	07537-00203	AIR TAIL JAW CONCERTINA TUBE	1	-	94	07002-00098	M5 NYLOK NUT	1	-
15	07003-00236	LIP SEAL (DYNAMIC)	1	1	55	07537-00204	SWITCH BLOCK	1	-	95	71221-20104	M5x19 C'SK SCREW	1	-
16	07003-00237	LIP SEAL (STATIC)	2	-	56	07537-00300	HEAD ASSEMBLY	1	-	96	71210-03205	GUIDE RING	1	-
17	07003-00271	'O' RING	1	-	57	07537-00400	HANDLE ASSEMBLY	1	-	97	07001-00442	M5x6 LONG SKT HD BUTTON SCREW	1	-
18	07003-00281	'O' RING	3	-	58	07537-00500	PNEUMATIC PISTON Assembly (87 to 96)	1	-	98	07002-00163	WASHER	2	-
19	07003-00287	'O' RING	1	-	59	07537-00600	07537 BODY MOULDING ASSEMBLY - RH	1	-					
20	07003-00288	'0' RING	2	-	60	07537-00700	07537 BODY MOULDING ASSEMBLY - LH	1	-					
21	07003-00383	'O' RING - (I/D 3.00 Sec 1.00)	2	-	61	71210-02008	TRIGGER	1	-					
22	07004-00058	1/8" STARLOCK WASHER CHROME	1	-	62	71210-02009	VALVE SEAT	1	-					
23	07004-00059	1/8" STARLOCK WASHER BLACK	1	-	63				-					
24	07005-00088	TRIGGER VALVE	1	-	64	71210-02014	CLAMP NUT	1	-					
25	07005-01274	1/8" BSP PLUG	1	-	65	71210-02024	TRIGGER PIN	1	-					
26				-	66	71210-02031	SILENCER	2	-					
27	07005-01972	L TYPE THREADED NIPPLE	1	-	67	71210-02055	RUBBER BOOT	1	-					
28	07005-10057	NON-RETURN VALVE	1	-	68	71210-03400	VALVE SPOOL ASSEMBLY	1	-					
29	07007-00017	DUST CAP	1	-	69	07537-00810	TRANSFER TUBE ASSEMBLY	1	-					
30	07007-00224	DIA 3 x 10 LONG SPIRAL PIN	2	-	70	71210-03700	ON / OFF VALVE ASSEMBLY	1	-					
31	07007-01503	BOOK SYMBOL LABEL (NOT SHOWN)	1	-	71	71210-03800	INTENSIFIER SEAL ASSEMBLY	1	-					
32	07007-01504	CE MARK LABEL (NOT SHOWN)	1	-	72	71211-02001	BODY MACHINED	1	-					
33	07008-00010	6" FLEXIBLE HOSE	1	-	73	71211-02002	BASE COVER MACHINED	1	-					
34	07151-00403	JAWS	2	2	74	71211-02004	TIE RODS	2	-					
35	07154-00404	SPRING	1	-	75	71211-02008	CYLINDER LINER	1	-					
36				-	76	71213-02010	TOP PLATE ASSEMBLY	1	-					
37	07490-03002	BARREL RETURN SPRING	1	-	77	71221-02005	BASE PLATE	1	-					
38	07530-00203	PISTON	1	-	78	71221-02006	SEALING WASHER	2	-					
39	07530-00204	STROKE LIMITER	1	-	79	71221-20101	COUNTER MOULDING	1	-					
40	07530-00206	RUBBING STRIP	1	1	80	71221-20102	SPECIAL M4 SCREW	2	-					

IRIVET
Компания АЙРИВЕТ
ООО "АЙ-РИВЕТ"
www.irivet.ru
Тел: +7 (495) 135 4201
Тел: +7 916 922 6789
Почта: order@irivet.ru

Avdel®