RIVETEC

TITGEMEYER Group

Riveting Tool
RL 12

Operating Manual

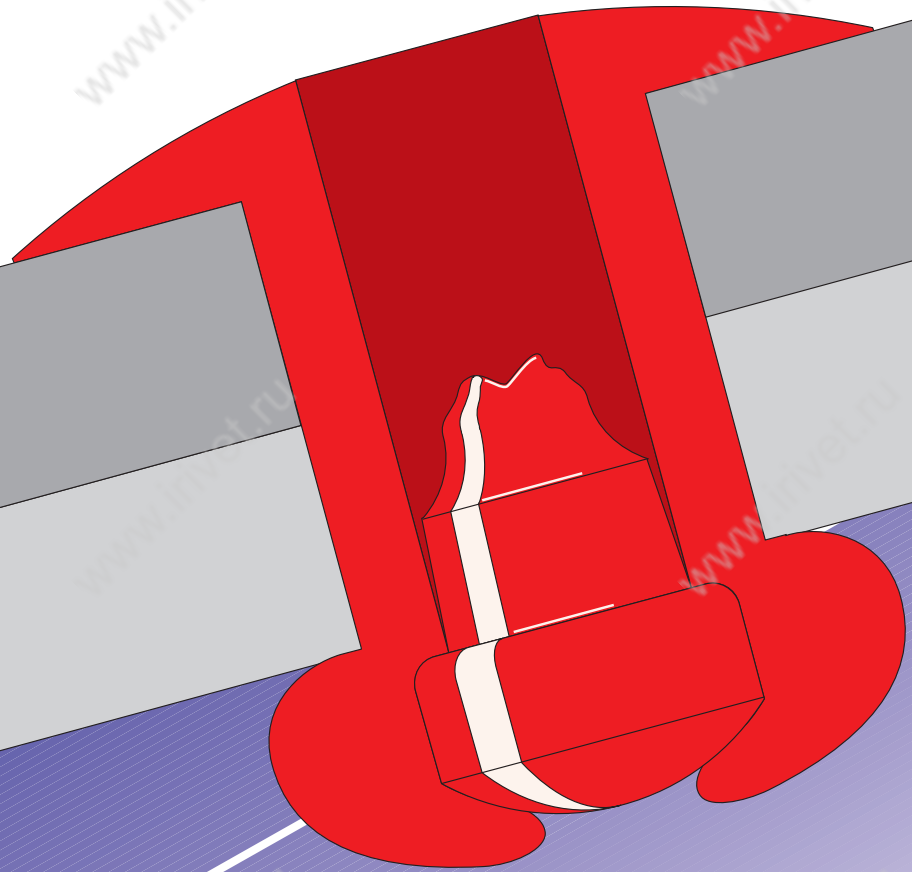

www.irivet.ru

Table of contents

Guiding instructions **4**
Cautions, instructions and procedural sections in the operating instructions 5
Markings on the riveting tool 6

Safety instructions **7**
Basic requirements while dealing with the riveting tool 8
Noise and vibration levels of the RL 12 10

Description of the riveting tool **11**

Necessary tools **13**

Storing the riveting tool **13**

Preparing the riveting tool **14**

Operating the riveting tool **17**
Setting the blind rivet 18
Changing the nose piece 19

Maintaining the riveting tool **20**
Bleeding the hydraulic section, refilling hydraulic oil 20
Changing the jaws 22
Adjusting the jaw case body 24
Table for torque values 25

Servicing and cleaning the riveting tool **26**

Maintenance intervals **27**

Trouble shooting **28**

Disposal of the riveting tool **31**

Technical data **31**

Guarantee , Package Contents **33**

Declaration of conformity **36**

Guiding instructions

Instruction

The legislator prescribes that the user must be well trained for using com-pressor-driven riveting tools. Ml pcoscqr*rfgqrp_dgde amsjb`cbmlc`wbc_jcpmpbgpcarjw`wPGTCRCA q,p,m,

Technological level

This riveting tool is as per the latest technological standards. For the device to function properly, it is necessary to operate it in an expertly manner, with adherence to safety requirements.

Reading the guiding instructions

Before using the riveting tool for the first time, read the guiding instructions carefully.

Procedures

All the procedures necessary for the operation have been described in these guiding instructions. You may carry out only those procedures, which have been described here.

Obstructions

In case of obstructions, you may repair only those obstructions, which have been marked with a O (Operator).

Illustrations and position-codes

All the illustrations and position-codes in the individual diagrams take reference from the list of parts in the last pages.

Table for torque values

For sizes of screws and threads, you will find a table containing the torque values in the chapter “Maintening the riveting tool”.

Cautions, instructions and procedural sections in the operating instructions

Please follow the instructions and safety informations.

In these operating instructions, some sections have been further illustrated through diagrams
Please acquaint yourself well with these diagrams and their meanings:

Caution Hazard of injury! This marking indicates a potential hazard.

Attention Material damage! This marking points at a procedure, which may cause damage to the riveting tool or the work-piece.

Note This marking indicates useful information

- This point (•) marks every paragraph, which requires you to act by yourself.

Attention Environmental hazard! This marking indicates a potential environmental hazard.

Markings on the riveting tool

This pictogram indicates that you must read the operating instructions before using the riveting tool.

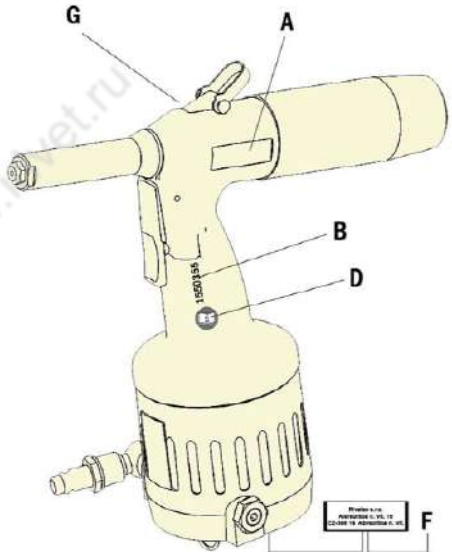

A Marking of the type

B Serial number

C CE-marking

D Instruction for reading the operating instructions

F Name of the manufacturer as well as the value of the maximum operating pressure

G Supplier RIVETEC

Safety instructions

Application as per the purpose

The riveting tool is meant exclusively for setting blind rivets.
The riveting tool RL 12 has been designed for setting all materials of blind rivets with a shank diameter of 2.4 to 5.0 mm.
This riveting tool must be used only as a hand-held device!
The client is fully responsible for any modifications to the riveting tool!

Improper use

Never throw away or drop the riveting tool!

Clean and dry compressed air

Please take care that only clean and dry compressed air is let into the riveting tool. Moisture and dirt can damage the riveting tool. Use only such compressed air, which falls into class 2 of air quality as per ISO 8573-1.

Caution Hazard of injury because of explosion! Never use the riveting tool in an atmosphere prone to explosions. Ensure that the workplace is well lit and clean.
Hazard of injury due to the openly moving compressed air hose. Connect and lay the compressed air hose properly.
Hazard of injury due to tripping over! Lay the compressed air hose in such a way that nobody should trip over it.

Attention Material damage! The maximum operating pressure is 7 bar.
For increasing the durability of the riveting tool, it is recommended to fit a compressed air-maintenance unit in the compressed air hose.

Basic requirements while dealing with the riveting tool

Caution Do not operate the riveting tool when it is directly pointing at any person.

Follow the prevalent guidelines for the prevention of accidents in the respective country.

Use only those fittings and hoses, which have been approved for the operating pressure.

Disconnect the compressed air supply from the riveting tool at the time of installation or maintenance.

Wear personal safety gear (safety glasses and safety helmet).

Attention Please pay attention to the information on the pack of the blind rivet.

Use the riveting tool only at operating temperatures above 5°C and 45°C.

For different diameters of the rivet shank, use the appropriate nose piece, as prescribed.

Do not throw away the riveting tool.

Maintenance and servicing

The operator may only carry out the maintenance and repair work described in these operating instructions

Service instructions

Maintenance and service work not described in these operating instructions may only be carried out by trained specialists following instruction by RIVETEC on the basis of the service instructions which also exist.
See the address on last Page for more information on service instructions and training.

→ **Note** The manufacturer accepts no liability for damage resulting from incorrect repairs or the use of spare parts from other sources

At the time of leaving the workplace, do not leave the riveting tool with pressure on.

Guarantee

A guarantee is void, if any repair work carried out on the riveting tool has lead to any damage of the riveting tool.

Declaration of conformity

The riveting tool RL 12 has been checked and manufactured according to European guidelines. The declaration of conformity can be found on the second last page.

Noise and vibration levels of the RL 12

Noise level

The sound-emission level for workplaces is L_{PAI}<70dB(A) as per ISO 10843 and DIN EN 3744.

Vibration level

The effective value measured on acceleration with the handle, as per ISO/FDIS 8662-11, is a_{hw}<2,5m/s^2.

Description of the riveting tool

The riveting tool RL 12 works according to a pneumatic-hydraulic prinziple.
It consists of the following operation-related components:

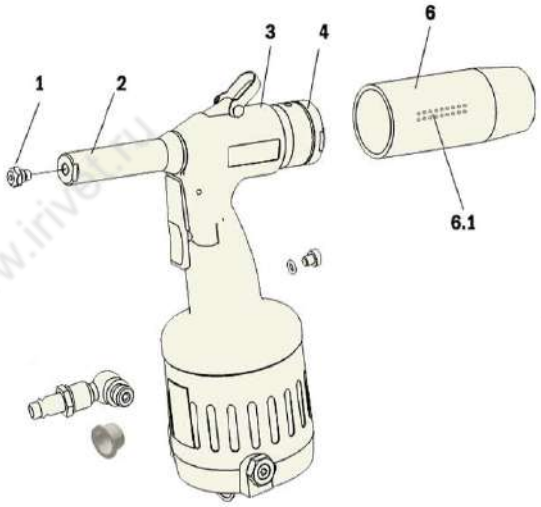

1	Nose pieces	Nose pieces for blind rivets - (burnished black) - are screwed into the bottom of the valve housing
2	Nose cap	Conceals the jaw case body and the jaw case
3	Hydraulic housing	The pneumatic and the hydraulic units are located in the hydraulic housing
4	Safety mechanism	Prevents the spent mandrel from leaving the tool if the collecter is not filled (the locking-catch nose (4.1), which is subject to spring thrust, clicks into place when the spent mandrel collector (6) is fitted on
6	Spent mandrel collector	Serves the purpose of collecting spent mandrels (with air-outlet (6.1), the direction of the escaping air can be changed).

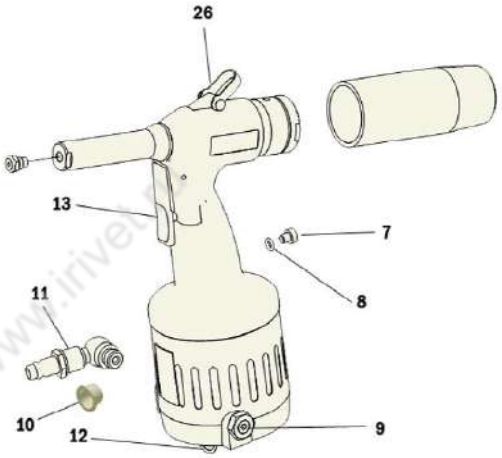

Note The socket head screw (7) and the O-ring (8) are screwed tightly into the grip. The socket head screw (7) must not be loosened, else the hydraulic oil will leak.

7	Socket headscrew	Locking for the hydraulic oil system
8	O-Ring	Sealing of the hydraulic oil system
9	Safety valve	(Brass) In case of very high pressures (approx. 8 bar or more), it opens, and lets the air out.
10	Plug	Serves the purpose of protection of the thread and also against dirt
11	Swivel-joint	Serves as the connection for compressed air hoses (operating pressure 6 bar)
12	Suction-trigger	In/out for mandrel - suction arrangement
13	Trigger	When activated, the riveting procedure starts
26	Hang-up eyelet	For hanging up on a hook whenever stationary

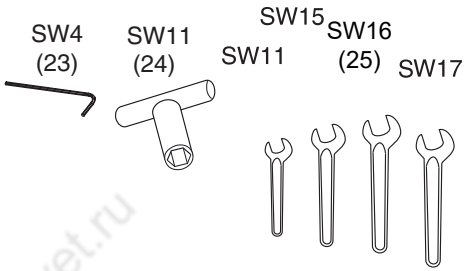

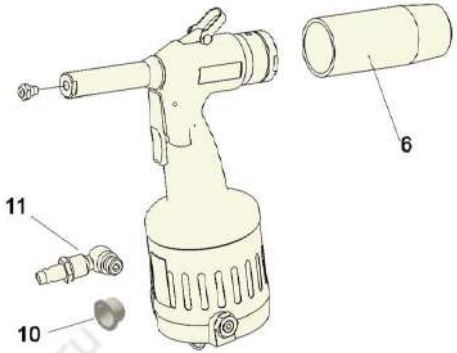

Necessary tools

You will require the following tools for all installation, servicing and maintenance work. The tools (23, 24, 25) can be ordered.

Tools

— Internal hex key	SW4 (23)
— Box wrench	SW11 (24)
— Wrench	SW11, SW15 (2x)[1], SW16[1](25), SW17[1]

[1] No delivery possibility

Storing the riveting tool

Until first use

If you do not use the riveting tool immediately, store it inside the original packing, dry and dust-free.

Long term storage after usage

Clean the riveting tool (see “Servicing and cleaning riveting tool”). Turn off the spent mandrel collector (6), unscrew the swivel joint (11), and close the opening with a plug (10). As far as possible, store all parts in their original packing.

After long-term storage

After long-term storage (about 3 years), change the hydraulic oil before reuse.

Preparing the riveting tool

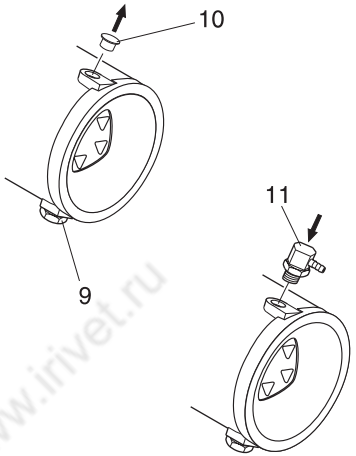

Package insert The components ordered by you are marked as per the checklist found inside the packing.

→ **Note** Please check the contents of the packing, for completeness of the checklist

In every case, please carry out a visual check of the riveting tool before starting any work:
— for external damages,
— for oil leakage from the riveting tool.

• Remove the plug (10) from the connection port, and store in the original packing.

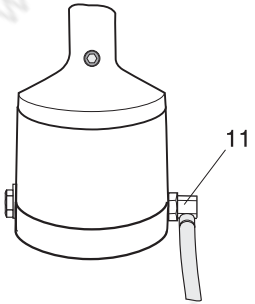

→ **Note** The swivel joint (11) and the safety valve (9) can be alternatively fitted on both the sides of the hydraulic housing. The diagram below shows the arrangement for a right-hander.

→ **Note** In case of all screw-fittings, observe the table for torque values in the chapter “Riveting tool maintenance”

• Screw on the swivel joint (11) and tighten using the wrench SW17 (see “Table for torque values”).

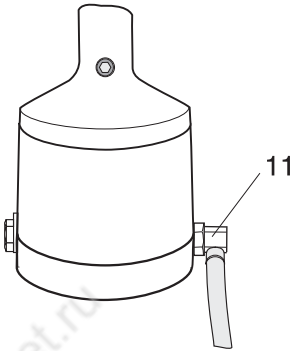

Note Depending on the type of compressed air supply, it may be necessary to connect a fitting different from the one provided, to the riveting tool. For this, you need to have a fitting having a 1/4" Withworth pipe thread as per ISO 228.

Attention Material damage by compressed air!
As per norm ISO 8573-1, class 2, compressed air must be dry and clean. We recommend that you fit a compressed air-maintenance unit to the riveting tool.

- Compressed air hose should be connected to the swivel joint (11), as prescribed.

Note The operating pressure must be between a minimum of 5 and a maximum of 7 bar!

Preparing the riveting tool

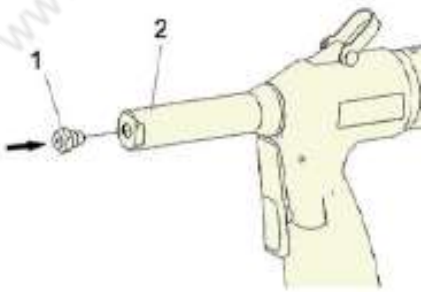

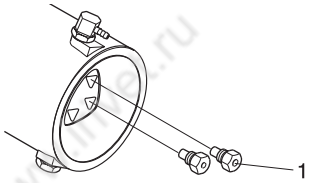

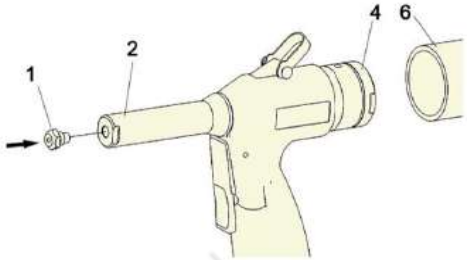

→ **Note** You may use nose pieces for rivet shank diameter of 2.4 to 5.0 mm

→ **Note** Before you start the operation procedure, check whether the appropriate nose piece (1) has been fitted. If not, then the same should be replaced with the appropriate nose piece.

- Unscrew the right nose piece (1) from the locating hole on the underside of the riveting tool, using a box wrench SW11 (24).

- Unscrew the nose piece (1) from the nose cap (2), and screw into the locating hole.

→ **Note** Clean the replaced nose piece (1) and screw into the locating hole on the underside of the riveting tool using the box wrench SW11 (24)

Attention Material damage due to damaged threads. It should be possible to screw on the nose piece with bare hands. Do not use force! You must overcome the spring thrust on the jaws.

- Screw the nose piece (1) carefully into the nose cap (2).
- Tighten the nose piece (1) using box wrench SW11 (24) (see “Table for torque values”).

Push open the spent mandrel collector:

- Put the spent mandrel collector (6) over the locking catch nose (4.1) of the safety mechanism (4).
- Push the spent mandrel collector onto the casing while rotating, until the locking catch nose (4.1) clicks into place.

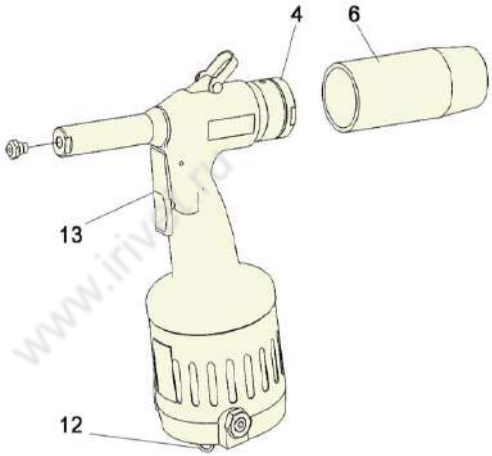

Operating the riveting tool

Caution Hazard of injury due to the rivet head coming off! Therefore, examine the riveting tool without blind rivet. Wear safety glasses.

- Connect the compressed air supply (6 bar) onto the riveting tool.
- Check the riveting tool before starting any work where you use triggers (12) and (13).

Caution Hazard of injury due to unchecked wearing out of the mandrel! Use only an undamaged spent mandrel collector, and ensure that it has been correctly fitted (locking catch nose (4.1) of the safety mechanism (4) properly clicked into place).

Attention Material damage! Always work with artificial spent mandrel collector (6)! In the absence of the spent mandrel collector, the safety mechanism (4) closes the outlet. Collected mandrels are left back in the riveting tool, where they could jam. If proper attention is not paid, then the riveting tool may break down.

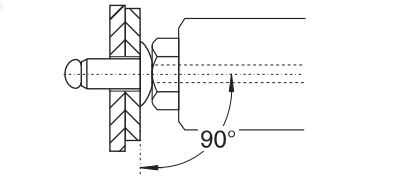

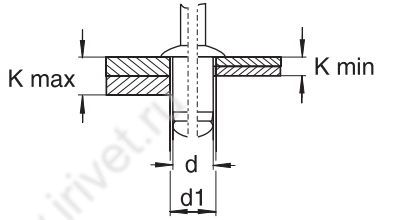

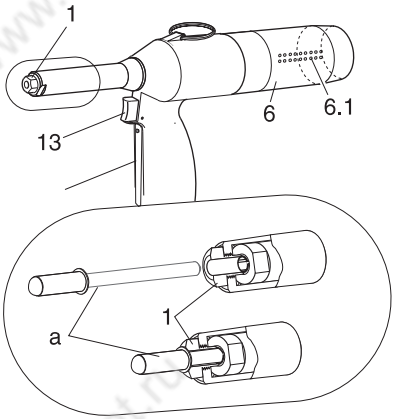

Setting the blind rivet

What you must take care of

Attention Material damage! Always set the riveting tool at the correct angle (90°) with the surface of the work-piece to be riveted. A slanted setting will lead to defective riveting.

Note For the size of the hole (d1) and of the clamping grip (K), refer to the information given by the rivet manufacturer

- Suction trigger (12) should be straightened upto the stop point and held there. Air escapes from the air outlets (6.1).
- Feed the blind rivet (a) into the nose piece (1).
  The blind rivet is sucked and held in the nose piece.
- Insert the blind rivet (a) into the already prepared hole, and press firmly.
- Straighten the trigger (13) upto the stop point, and hold it there.
  The rivet is set and the mandrel breaks off at a pre-determined break point.
- Release trigger (13).
  After releasing the trigger, the spent mandrel is automatically sucked into the spent mandrel collector (6).

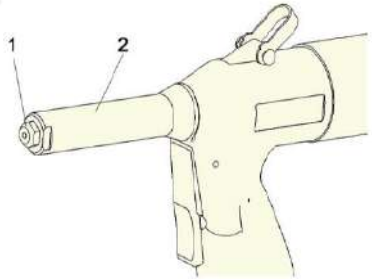

Changing the nose piece

You can adapt the riveting tool for use with blind rivets of various materials and sizes (rivet shank diameter between 2.4 and 5.0 mm), wherein you are only required to change the nose piece.

→ **Note** For a tightly fitted nose piece (1), clamp the riveting tool into a vice if required, and loosen the nose piece. If you clamp the riveting tool into a vice, then insert a soft material in-between (Alu/ wood).

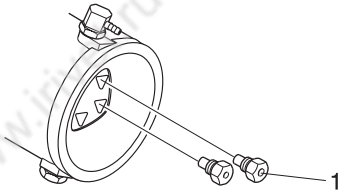

- Unscrew the appropriate nose piece (1) from the collecting hole on the underside of the riveting tool using the box wrench SW11 (24).
- Unscrew the nose piece (1) from the nose cap (2).

→ **Note** Clean the replaced nose piece (1) and screw into the collecting hole on the underside of the riveting tool using the box wrench SW11 (24)

Attention Material damage due to damaged threads. It should be possible to screw on the nose piece with bare hands. Do not use force! You must overcome the spring thrust on the jaws!

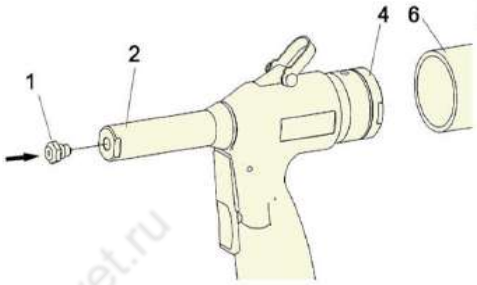

- Screw the nose piece (1) carefully into the nose cap (2).
- Tighten the nose piece (1) using the box wrench SW11 (24) (see “Table for torque values”).

Maintaining the riveting tool

Caution Hazard of injury if handled in an improper manner! Servicing, maintenance and repairs of the riveting tools must be carried out professionally. On completing this work, there should not be any more hazard to the operator, if used as per the regulations. The operator may only carry out the operations mentioned here.

Bleeding the hydraulic section, refilling hydraulic oil

It is necessary to bleed the hydraulic system or to refill the hydraulic oil when:

— oil is leaking from defective O-rings,

— after an oil-change at the time of an overhaul (either after a maximum of 3 years, or after 2000 working hours).

• Detach the compressed air connection.

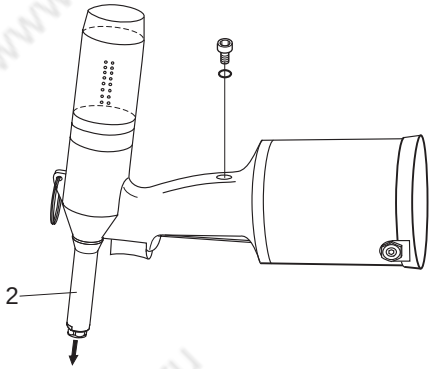

→ **Note** Unscrew nose cap (2), so that there is no more pressure on the hydraulic cylinder, else it would not be possible to fill in adequate oil

→ **Note** If you clamp the riveting tool into a vice, then insert a soft material in-between (Alu/ wood)

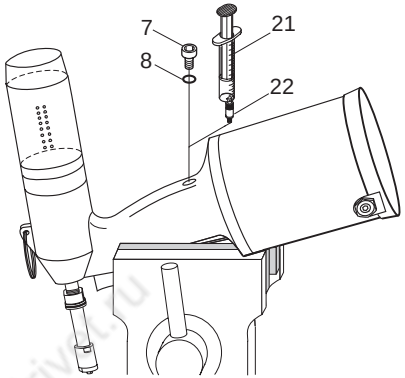

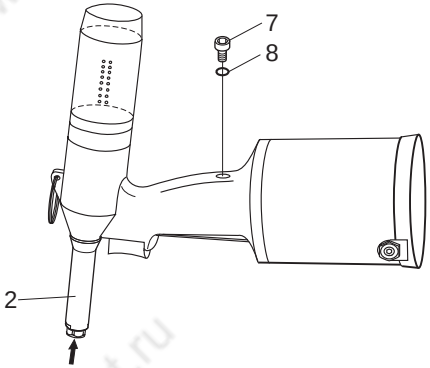

- Bend the riveting tool carefully towards the front at an angle, and fix e.g. inside a vice (like illustrated in the diagram).

This position is critical, where the trapped air can escape when necessary (bleeding the hydraulic section).

Attention Environmental hazard! Always use a large bowl for collecting oil. Please observe all the environmental regulations prevalent in the respective area.

Attention Material damage! Do not let the O-ring (8) be damaged. If the O-ring gets damaged, then replace immediately.

- Unscrew the socket head screw (7) in the hydraulic housing carefully, using the internal hex key SW4 (23).
- Screw the oil refill adapter screw (22) into the free opening.
- Set the filled oil gun (21).
- Using the oil gun (21), inject the hydraulic oil (e.g. DEA Astron HLP 32 or a similar grade oil) firmly.
- Withdraw the oil gun (21) and unscrew the oil refill adapter screw (22).
- Screw on the socket head screw (7) with O-ring (8) and tighten using an internal hex key SW4 (23) (see “Table for torque values”).
- Rub the riveting tool dry.
- Screw on the nose piece (1).
- Loosen the fixed riveting tool.
- Reconnect the compressed air supply.
- Carry out a test run without blind rivet.

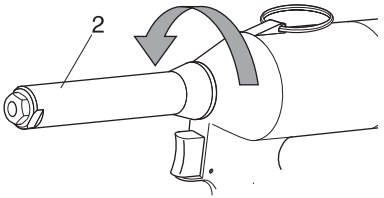

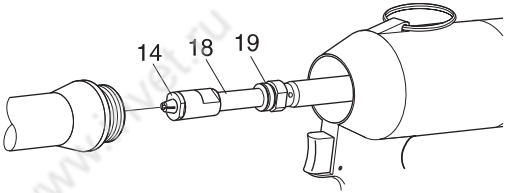

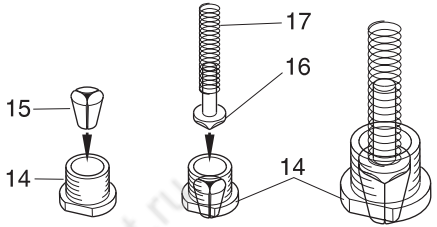

Changing the jaws

The jaws are subject to mechanical wear out, and must be replaced as soon as they start losing grip over the mandrel.

- Detach the compressed air supply.

Caution Hazard of injury by means of bruises or cuts in case of unchecked cutting stroke! Always detach compressed air supply before unscrewing the nose cap (2).

Attention Material damage! Do not let O-ring (19) get damaged. If the O-ring has been damaged, replace immediately.

- Loosen the nose cap (2) with a wrench SW16, unscrew, and separate carefully from the jaw case body (18).
- Loosen the jaw case (14) from the jaw case body (18) using a wrench SW15 (hold against the jaw case body using wrench SW15).
- Unscrew the jaw case (14) carefully by hands - the jaws (15) remain loose inside the jaws casing - and discard.
- Remove jaw pusher (16) and pressure spring (17) from the jaw case body (18) and discard.
- Remove old jaws (15) from the jaw case (14), apply little oil on the new jaws, and put to use.
- Set the jaw pusher (16) with the pressure spring (17) vertically inside the jaw case (14).

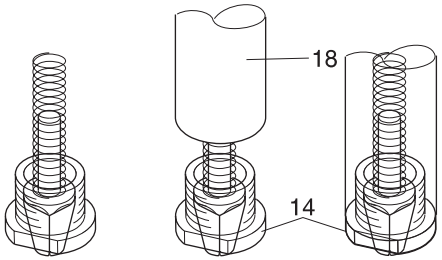

- Hold the riveting tool vertically, the jaw case body (18) shows from below.
- Insert the complete jaw case (14), along with the jaws, jaw pusher and pressure spring set in, into the jaw case body.
- Screw the jaw case (14) carefully by hands - against the thrust of the springs - into the jaw case body (18).
- Fix the jaw case body (18) using a wrench SW15 and a lock nut, and tighten the jaw case (14) using a wrench SW15 (see “Table for torque values”).

Attention Material damage! If mounted correctly, then the jaws must jut out at the same level from the jaw case (14). It should be possible to press them into the jaw case (14) with the thumb.

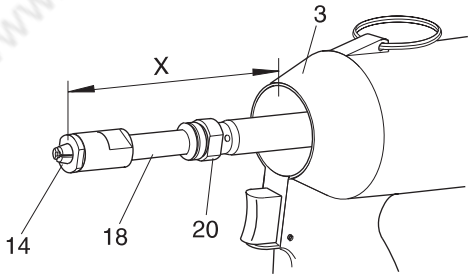

Note At the time of replacing the jaws, it may be observed that the lock nut (20) at the jaw case body (18) loosens and adjusts itself. In such a case, the gap between X needs to be readjusted (see “Adjusting the jaw case body”).

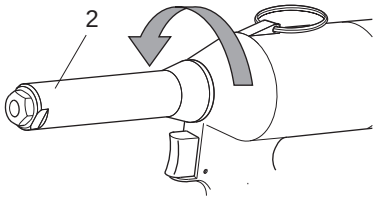

Adjusting the jaw case body

In order to enable the riveting tool to travel an adequate stroke, the gap between the jaw case (14) and hydraulic housing (3) must be adjusted correctly.

- Detach the compressed air supply.

Caution Hazard of injury by means of bruises or cuts in case of unchecked cutting stroke! Always detach compressed air supply before unscrewing the nose cap (2).

Attention Material damage! Do not let O-ring (19) get damaged. If the O-ring has been damaged, replace immediately.

- Loosen the nose cap (2) with a wrench SW16 unscrew, and separate carefully from the jaw case body (18).
- Measure the distance between the jaw case (14) on the facing side and the hydraulic housing (3) on
  measu-res X=79
- Loosen the lock nut (20) from the jaw case body (18) using a wrench SW15, till the jaw case body (18) can rotate freely.
- Adjust the jaw case body (18) (for left or right side revolutions), till the distance of X is obtained.
- Screw the lock nut (20) against the jaw case body (18).
- Hold the jaw case body (18) in this position using a wrench SW15, and tighten the lock nut (20) using a wrench SW15.

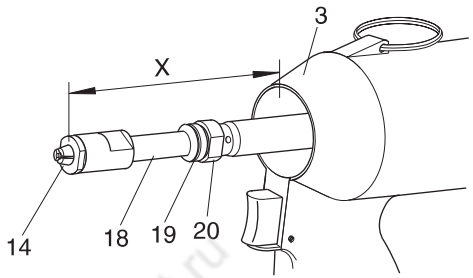

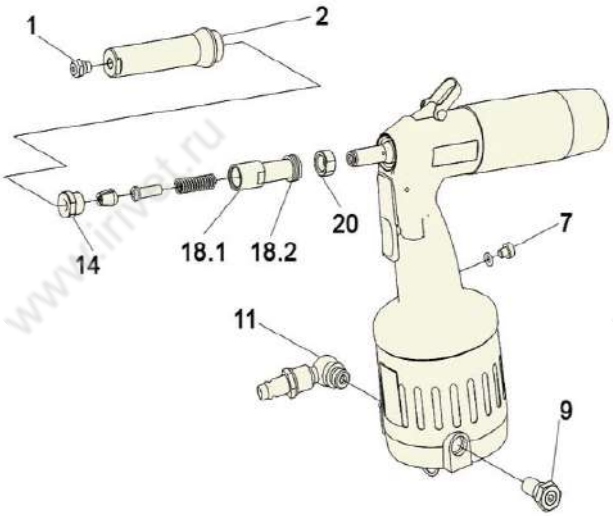

Table for torque values

In the following table, you will find torque values, which you are required to adhere to while tightening the screws/nuts.

Pos.	Name	Threading	Torque value MA in Nm
1	Nose piece	Metrical M8	5
2	Nose cap	Metrical M21x1	7
7	Socket head screw	Metrical M6	4
9	Safety valve	Withworth-pipe-thread 1/4”	20
11	Swivel joint	Withworth-pipe-thread 1/4”	20
14	Jaw case	Metrical M14x1	20
18.1	Jaw case body	Metrical M14x1	20
18.2	Jaw case body	Metrical M11x1	6
20	Lock nut	Metrical M11x1	6

Servicing and cleaning riveting tool

Caution Hazard of injury if handled in an improper manner! Servicing, maintenance and repairs of the riveting tools must be carried out professionally. On completing this work, there should not be any more hazard to the operator, if used as per the regulations. The operator may only carry out the operations mentioned here.
Hazard of injury if the riveting tool falls down! The hydaulic housing must always be kept dry, clean and oil- and fat-free.

Attention Material damage due to corrosion! Do not use any highly active cleaning agents or combustible liquids for cleaning purpose!

The following routine is recommended:
The riveting tool must be cleaned and checked for mechanical defects as per the respective application type.
After the riveting tool has been cleaned and when it is to be stored for a long period, lightly grease all the external metallic components (see “Maintenance intervals”).

Maintenance Intervals

Intervall	Activity	How?	Who?	Remark
Daily before use	Check for cracks	Visual check	Operator	—
Daily before use	Check nose piece for rivet diameter and wear and tear	Visual check	Operator	If required, replace nose piece
Daily before use	Check the jaws	Functional check	Operator	If required, clean and change jaws
Daily before use	Check for oil leaks from the riveting tool	Visual check, if required, fill with acid-free oil, and bleed hydraulic system	Operator	—
Daily after use	Clean riveting tool	With a rag	Operator	—
Daily after use	Oil moving parts	With acid-free oil e.g. ELFOLNA 46	Operator	—
Either throughout the 3 years or after a period of 2000 working hours	Change hydraulic oil	With acid-free oil e.g. DEA Astron HLP 32	Professional	A complete oil change, to be carried out only by a professional

Trouble shooting

Operations, which may be carried out by the operator, are marked with the letter **O** .
Operations, which may be carried out only by an expert person, are marked with the letter **P**

Caution Hazard of accident! In any case, keep the compressed air supply detached till the source of the problem is eliminated.

Attention Material damage! Operations, which have been marked with the letter **P**, must be carried out only by well- trained experts. Deliver riveting tool from overhaul

Any replacement of original spare parts may be carried out only by well-trained experts.

Note After every instance of problem- removal, a thorough functional check must be carried out

Problems	Cause	Solution
Blind rivet is set correctly	Supply of compressed air is too rare	(**O**) Check compressed air supply (**O**) Set the compressed air setting on the maintenance unit at a maximum of 7 bar
	Jaws are dirty	(**O**) Clean jaws
	Jaws are worn out	(**O**) Change jaws (see “Maintaining the riveting tool”)
	Jaw case and jaw case body are loose	(**O**) Tighten the screws/nuts (see “Maintaining the riveting tool”)
	Reduction in stroke due to lack of sufficient oil	(**O**) Check oil quantity and fill up (see “Maintaining the riveting tool”)
Blind rivet can not be inserted	Oil quantity in the system too high	(**O**) Check and adapt oil quantity (see “Maintaining the riveting tool”)
	Wrong nose piece	(**O**) Change nose piece (see “Operating the riveting tool”)
	Nose piece is loose	(**O**) Tighten screws/nuts (see “Maintaining the riveting tool”)
	Travel-path of the mondrel is blocked	(**O**) Empty riveting tool mandrel collector
	X-value is too low	(**O**) Reset the value of X (see “Adjusting the jaw case body”)

Problems	Cause	Solution
Mandrel is not sucked	Supply of compressed air is too rare	(**O**) Check supply of compressed air (**O**) Set the compressed air setting on the maintenance unit at 6 bar (**P**) If operating pressure is OK, deliver riveting tool from overhaul
	X-value is too low	(**O**) Reset the value of X (see “Adjusting the jaw case body”)
	Safety valve gets blown off	(**O**) Check the setting of compressed air
	Safety valve is not tight	(**O**) Tighten the safety valve
	Safety valve is defective	(**O**) Replace safety valve
Air bubbles in the hydraulic system	Oil level is too low	(**O**) Check oil level and fill up
	Not bled correctly	(**O**) Bleed the hydraulic unit (see “Maintaining the riveting tool”), change the O-ring if required
	O-ring is leaking	(**P**) Deliver riveting tool from overhaul
Stroke is too short	Oil level is too low	(**O**) Check oil level and fill up
	X-value is too low	(**O**) Reset the value of X (see “Adjusting the jaw case body”)
Loss of hydraulic oil due to leakage	Riveting tool is defective	(**P**) Deliver riveting tool from overhaul
Safety valve gets blown off	Compressed air pressure is too high	(**O**) Check and adjust compressed air setting
	Valve is defective	(**O**) Replace safety valve
Excessive loss of oil from riveting tool	Leaking and worn out O-rings inside the riveting tool	(**P**) Withdraw the riveting tool from the work-routine, and order an overhaul

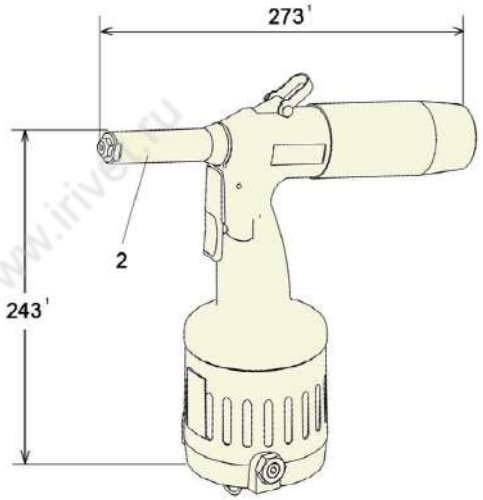

Disposing of the riveting tool

Ensure that the hydraulic oil is inside the riveting tool. Dispose it off in an environmentally friendly manner.
Send the riveting tool back to the manufacturer in it's original packing, if still available.

Technical data

Type of riveting tool:	RL 12
Height:	243 mm[1]
Width:	273 mm[1]
Weight:	1.4 kg[1]
Operating pressure:	5-7 bar
Compressed air supply	
Nominal diameter:	DN 6
Power output (at 6 bar):	approx 8 kN
Operating stroke:	approx. 14 mm
Operating range:	Blind rivet-shaft Diameter 2.4 to 5 mm
Sound emission level in the workplace:	L_{PAI}<70dB(A)
Vibration level:	a_{hw}<2,5m/s^2

If desired, the nose cap (2) can also be counted in other measure ments.

[1] The length and height and weight measurements of the riveting tool are as per the standard procedures.

Guarantee

Other than the official guarantee (6 months), the company RIVETEC also offers a guarantee of an additional 6 months from the date of purchase. (The bill being the proof thereof).
The following working parts are excluded from the guarantee agreement :
— Jaws (15)
— Nose piece (1)
— Socket head screw (7) with O-ring (8)
— O-rings (5) and (19)
— Jaw case (14)
— Spent mandrel collector (6)

Package Contents

1x Riveting Tool RL 12
1x Swivel Joint
1x Oil Gun
1x Adapter Screw
1x Box Wrench SW11
1x Internal Hex Key SW4
1x Wrench SW11
1x Nose Piece Ø2,4 (is located in the bottom of the riveting tool)
1x Nose Piece Ø3 (is located in the bottom of the riveting tool)
1x Nose Piece Ø4 (is located in the bottom of the riveting tool)
1x Noce Piece Ø5 (mounted on the nose cap of the riveting tool)

List of spare parts are available upon request from your dealer.

RIVETEC

TITGEMEYER Group

ES PROHLÁŠENÍ O SHODĚ
EU DECLARATION OF CONFORMITY

Název produktu:
Product Name: **RL 12**

Kat. číslo:
Cat. Number: **99 - 0167**

Určení produktu:
Specifications: pneumaticko-hydraulické nýtovací nářadí pro usazování **maticových** nýtů
air-hydraulic riveting tool for installing **threaded rivets**

Výrobce / Manufacturer

RIVETEC s.r.o.
Albrechtice nad Vltavou 16
CZ-39816 Albrechtice nad Vltavou
IČ 60647761

prohlašuje, že uvedený výrobek byl vyroben v souladu s požadavky následujících směrnic:

declares that the product was manufactured in confirmity with the requirements of the following EC Directive:

ČSN EN ISO 12100 Bezpečnost strojních zařízení
ČSN EN 349 Bezpečnost strojních zařízení – Nejmenší mezery k zamezení stlačených částí lidského těla
ČSN EN 953 Bezpečnost strojních zařízení – Ochranné kryty
ČSN CR 954-100 Bezpečnost strojních zařízení: části řídicích systémů
ČSN EN 983 Bezpečnost strojních zařízení – Bezpečnostní požadavky pro fluidní zařízení a jejich součásti – Pneumatika
ČSN EN 999 Bezpečnost strojních zařízení – Umístění ochranných zařízení s ohledem na rychlosti přiblížení částí lidského těla
ČSN EN 61000-6-1 ed. 2 Elektromagnetická kompatibilita – Odolnost
ČSN EN 61000-6-4 ed. 2 Elektromagnetická kompatibilita – Emise
ČSN EN 60204-1 Bezpečnost strojních zařízení – Elektrické zařízení strojů – Všeobecné požadavky
ČSN EN ISO 13850 Bezpečnost strojních zařízení – Nouzové zastavení – Zásady pro konstrukci
ČSN EN ISO 13857 Bezpečnost strojních zařízení – Bezpečné vzdálenosti k zamezení dosahu k nebezpečným místům horními a dolními končetinami
ČSN EN ISO 1037 Bezpečnost strojních zařízení – Zamezení neočekávanému spuštění
ČSN EN 614-1 Bezpečnost strojních zařízení – Ergonomické zásady navrhování – Část 1
ČSN EN 60439-1 ed. 2 Rozvaděče nn – Část 1
2006/95/ES Elektrická zařízení určená pro používání v určitých mezích napětí
2004/108/ES Elektromagnetická kompatibilita
2006/42/ES Směrnice o strojích a zařízeních

Zákon č. 22/1997 Sb. o technických požadavcích
Zákon č. 71/2000 Sb. (změna zákona č. 22/1997 Sb.)
Zákon č. 205/2002 Sb. (změna zákona č. 22/1997 Sb.)
Zákon č. 226/2003 Sb. (změna zákona č. 22/1997 Sb.)
Zákon č. 102/2001 Sb. o obecné bezpečnosti výrobků
Zákon č. 227/2003 Sb. (změna zákona č. 102/2001 Sb.)
Nařízení vlády č. 18/2003 Sb. o požadavcích na výrobky z hlediska jejich elektrické kompatibility
Nařízení vlády č. 204/2003 Sb. o technických požadavcích na strojní zařízení

Místo a datum:
Place and date: Albrechtice nad Vltavou
27.11.2015

Jméno, funkce a podpis autorizované osoby:
Name, Title and Signature of Authorized Person: Ing. Antonín Solfronk
Managing Director

RIVETEC
TITGEMEYER Group

RIVETEC s.r.o.

Albrechtice nad Vltavou 16
CZ - 398 16

Plant
U Vodárny 1506 / 1 B22
397 01 Písek

Tel.: +420 382 206 711
Fax: +420 382 206 719
E-Mail: info@rivetec.cz
Web: www.rivetec.cz

TITGEMEYER GTO
Fastening Technology

GEBR. TITGEMEYER GmbH & Co. KG

Hannoversche Straße 97
49084 Osnabrück

Tel. +49 541 5822-0
Fax +49 541 5822-491

E-Mail: vertrieb-gfb@titgemeyer.com .
Web: www.titgemeyer.com

www.irivet.ru