FireFox® 2

(DE) **Pneumatisch-hydraulisches Blindnietmuttersetzgerät**
Betriebsanleitung

(GB) **Pneumatic-hydraulic blind rivet nut setting gun**
Operating instructions

(FR) **Outil hydro-pneumatique de pose d'écrous aveugles**
Mode d'emploi

(ES) **Remachadora neumática para tuercas remachables**
Instrucciones de uso

(IT) **Rivettatrice pneumo-idraulica**
Istruzioni per l'uso

(NL) **Pneumatisch-hydraulische Blindklinkmoeren machine**
Gebruiksaanwijzing

(DK) **Pneumatisk-hydraulisk blindnittemøtrik-pistol**
Driftsvejledning

(SE) **Pneumatiskt-hydrauliskt blindnitmutterverktyg**
Bruksanvisning

(FI) **Pneumatisk-hydraulisk blindnaglemutter-pistol**
Bruksanvisning

(NO) **Paineilmahydraulinen niittimutteripistooli**
Käyttöohje

(PT) **Rebitadeira pneumática-hidráulica para porcas-rebite cegas**
Manual de instruções

(CZ) **Pneumaticko-hydraulická nýtovací pistole**
Návod k použití

(GR) **Υδραυλικοπνευματική συσκευή πριτσινώματος τυφλών πριτσινιών**
Οδηγίες χρήσης

(HU) **Pneumatikus-hidraulikus vakszegecsanya behúzó szerszámgép**
Használati utasítás

(PL) **Pneumatyczno-hydrauliczna nitownica do nitonakrętek**
Instrukcja obsługi

(CN) 气动液压式
铆螺母枪
操作说明书

(RU) **Пневмогидравлический заклепочник для заклепок-гаек**
Инструкция по обслуживания

GESIPA Blindniettechnik GmbH
Nordendstraße 13-39
64546 Mörfelden-Walldorf
Germany

T +49 (0) 6105 962 0
F +49 (0) 6105 962 287
info@gesipa.com
www.gesipa.com

GESIPA®

www.irivet.ru

DE	**Seite**	**7-16**	Zum Lesen der Bedienungsanleitung bitte die erste Umschlagseite herausklappen.
GB	**Page**	**17-26**	When reading these instructions, please open the first cover leaf.
FR	**Page**	**27-36**	Mode d‘emploi: déplier la première page de couverture.
ES	**Página**	**37-46**	Para leer las instrucciones de uso, abrir la primera página de la cubierta.
IT	**Pagina**	**47-56**	Per leggere le istruzioni d’uso aprire la prima pagina.
NL	**Bladzijde**	**57-66**	Voor het lezen van de gebruksaanwijzing deze bladzijde openslaan.
DK	**Side**	**67-76**	Slå den første side ud for bedre at kunne lćse og forsta betjeningsvejledningen.
SE	**Sida**	**77-86**	Vid läsning af bruksanvisning skall första sista omslags sidorna vikasut.
FI	**Side**	**87-96**	Vennligst les forsiden først for å få en bedre rettledning og forståelse av bruksanvisningen.
NO	**Sivu**	**97-106**	Lukiessasi tätä käyttöohjetta käännä etummainen kuvasivu esiin.
PT	**Página**	**107-116**	Para ler as instruções de uso, favor abrir a folha no verso da capa.
CZ	**Strona**	**117-126**	Při čtení návodu první stranu otočit.
GR	**Σελίδα**	**127-136**	Για να διαβάσετε αυτές τις οδηγίες χρήσης, ξεδιπλώστε την πρώτη σελίδα του εξώφυλλου.
HU	**Oldal**	**137-146**	A kezelési útmutató elolvasásához kérjük nyissa fel az alső borítóoldalt.
PL	**Strana**	**147-156**	Aby przeczytać instrukcję obsługi prosz¸ rozłożyć pierwszą stronę okładki.
CN	页	**157-165**	阅读这些说明书时，请先打开扉页。
RU	**Страница**	**166-175**	Для прочтения руководства по эксплуатации, пожалуйста, откройте титульный лист .

www.irivet.ru

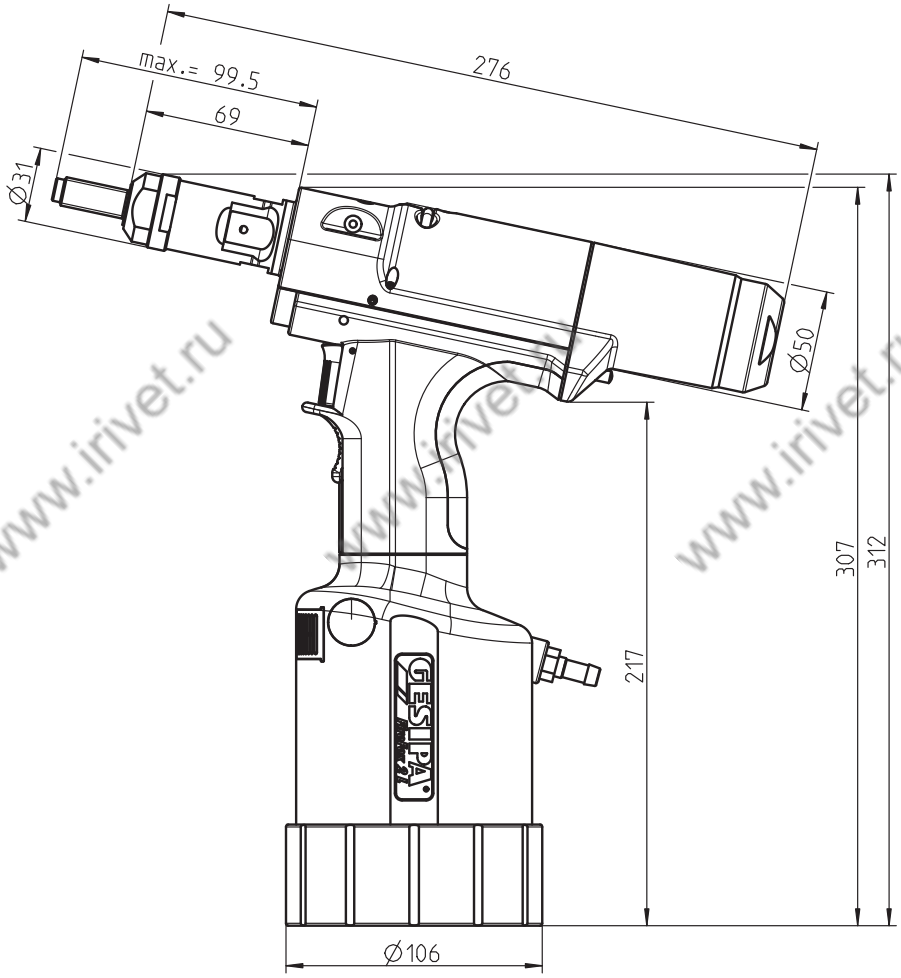

www.irivet.ru

Übersicht, Overview, Aperçu, Plano esquemático, Panoramica, Overzicht, Oversigt, Översikt, Oversikt, Yleiskatsaus, Vista Geral, Přehled, Επισκόπηση, Áttekintés, Przegląd, 一览图, Обзор

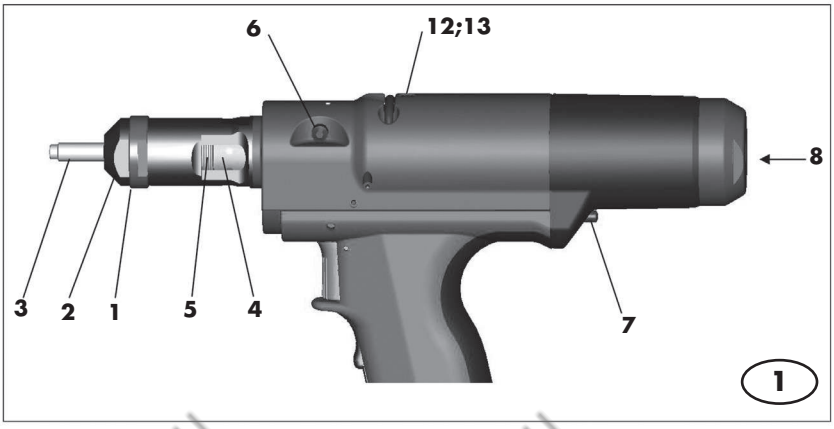

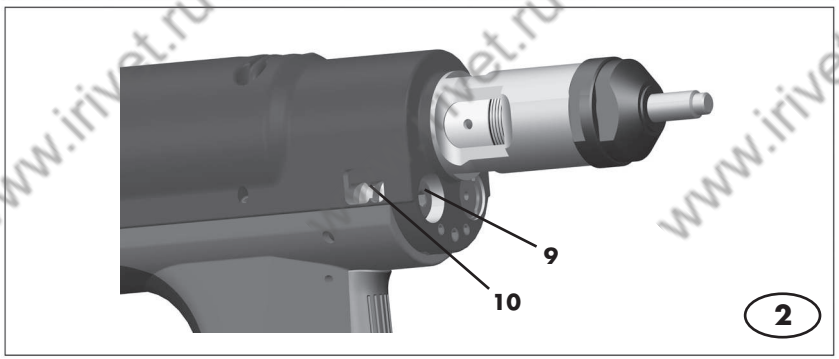

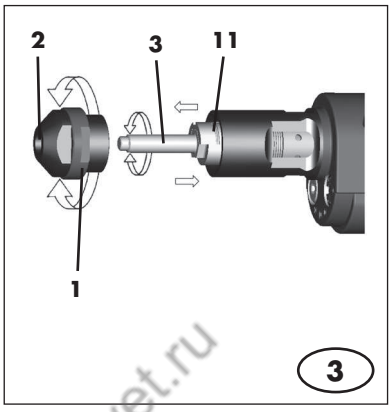

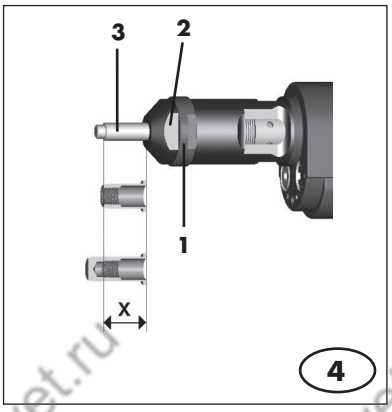

www.irivet.ru

(DE) **Ersatzteile**
(GB) **Spare Parts**
(FR) **Pièces détachées**
(ES) **Piezas de represto**
(IT) **Lista dei pezzi di ricambio**
(NL) **Onderdelen**
(DK) **Reservedele**
(SE) **Reservdelsar**
(FI) **Reservedeler**
(NO) **Varaosaluettelo**
(PT) **Peças sobressalentes**
(CZ) **Náhradní díly**
(GR) **Ανταλλακτικά**
(HU) **Alkatrészek**
(PL) **Części zamienne**
(CN) 备件
(RU) **Запчасти**

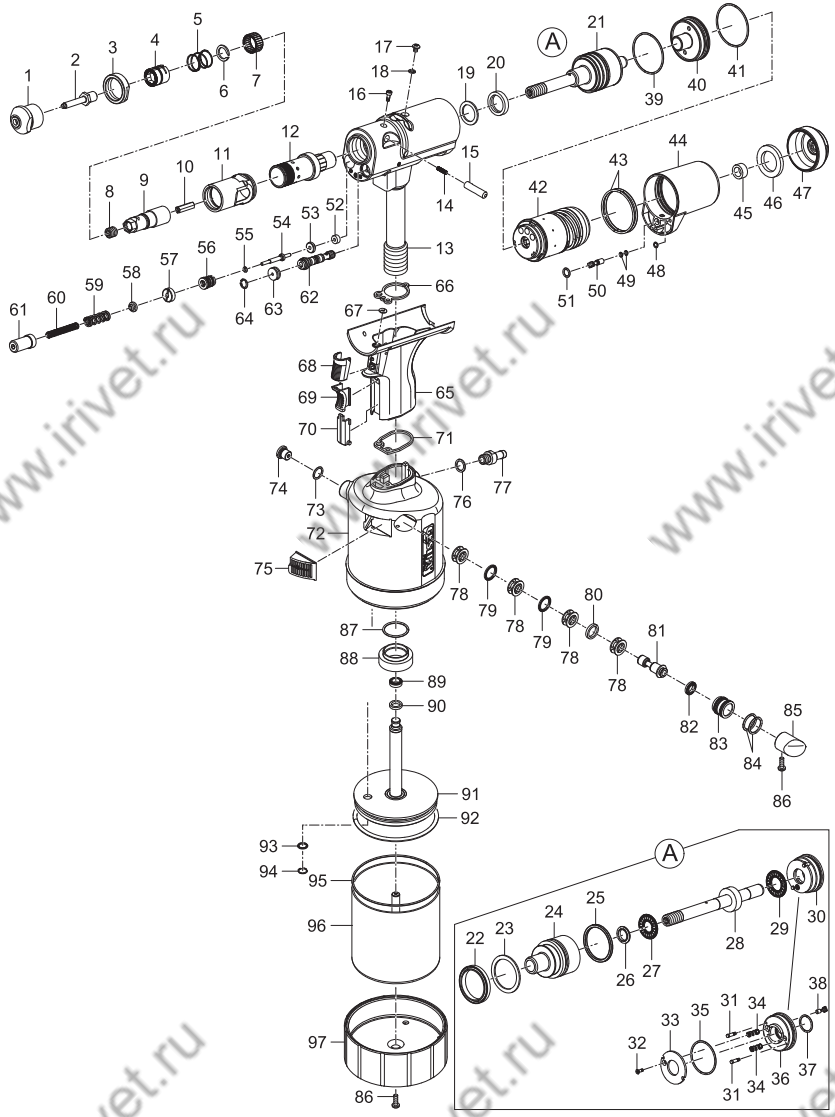

www.irivet.ru

1 •	143 6218	M3
	143 6219	M4
	143 6220	M5
	143 6221	M6
	143 6222	M8
	143 6223	M10
	143 6224	M12
	143 6256	6-32 UNC
	143 6257	8-32 UNC
	145 8113	10-24 UNC
	143 6258	10-32 UNF
	143 6259	1/4"-20 UNC
	143 6260	5/16"-18 UNC
	143 6261	3/8"-16 UNC
2	143 6211	M3
	143 6212	M4
	143 6213	M5
	143 6214	M6
	143 6215	M8
	143 6216	M10
	143 6217	M12
	143 6249	6-32 UNC
	143 6250	8-32 UNC
	143 6251	10-24 UNC
	143 6252	10-32 UNF
	143 6253	1/4"-20 UNC
	143 6254	5/16"-18 UNC
	143 6255	3/8"-16 UNC
3	143 6193	
4	145 8123	
5	143 6247	
6	144 6189	
7	144 6190	
8	144 6187	
9	143 6179	
10	143 6201	
11	143 6192	
12	143 6200	
13	145 8128	
14	143 6244	

15	143 6180
16	144 5427
17	143 5612
18	144 6013
19	143 6230
20	143 6234
21	145 8126
22	143 6227
23	143 6229
24	143 6204
25	143 6231
26	143 5236
27	144 6191
28	143 6296
29	144 5794
30	145 8125
31	143 6183
32	144 6188
33	143 6205
34	143 6293
35	143 6225
36	143 6197
37	143 6239
38	145 8124
39	143 6236
40	143 6198
41	143 6237
42	143 6168
43	143 6243
44	143 6170
45	143 6173
46	143 6174
47	143 6175
48	143 6242
49	143 6291
50	143 6292
51	143 5519
52	143 6233
53	143 6176
54	143 6177

55	143 5644
56	145 8127
57	143 6190
58	143 6178
59	144 6192
60	143 6245
61	143 6191
62	143 6297
63	145 1053
64	144 5285
65	145 8122
66	143 5472
67	143 6241
68	144 6025
69	143 5642
70	143 6169
71	143 5480
72	145 8118
73	143 5484
74	145 7750
75	145 7862
76	144 6030
77	143 5667
78	143 5648
79	143 5647
80	143 6248
81	143 6187
82	143 5675
83	143 5652
84	143 5688
85	144 6075
86	144 5773
87	143 5486
88	143 5492
89	143 6226
90	143 6235
91	145 8116
92	143 5834
93	143 5635
94	144 6082
95	143 5839
96	145 8114
97	143 5761
	144 5294

• Verschleißteile, wearing parts, pièces consommables, piezas consumibles, produzione di pezzi resistenti all'abrasione, sluitstukken, sliddele, slitdelar, slitedeler, sulkuosat, peças consumíveis, spotřební materiál, παραγωγή ανταλλακτικών, kopó alkatrészek, zużycie części, 耐磨零件, износ деталей

www.irivet.ru

Table of Contents

1. Overview (See images 1 - 4) 18

2. FireFox® 2 blind rivet nut setting tool 18
2.1 Correct use 18
2.2 Safety instructions 18
2.3 Work capacity 19
2.4 Technical data 19
2.5 Equipment/accessories 19

3. Starting procedure 20
3.1 How to change a threaded mandrel 20
3.2 How to set threaded mandrel length "X" 20

4. How to adjust the setting stroke or setting force 21
4.1 How to adjust the setting stroke 21
4.2 How to adjust the setting force 22

5. Sequence of operations 23
5.1 How to wind down a nut 23
5.2 How to set the blind rivet nut 23
5.3 How to remove a nut manually by turning 23

6. Maintenance and care 24

7. Troubleshooting 24

8. Notes on environment 25

9. Warranty 25

10. Declaration of Conformity EC 26

www.irivet.ru

1. Overview (See images 1 - 4)

Item	Designation	Abb.
1	Locknut	1;3;4
2	Nosepiece	1;3;4
3	Threaded mandrel	1;3;4
4	Stroke adjuster	1
5	Stroke scale	1
6	Release button	1
7	Wind down button	1
8	Allen key	1
9	Adjustable screw with colour scale	2
10	Display window	2
11	Slide	3
12	Oil refill screw	1
13	Seal	1

2. FireFox® 2 blind rivet nut setting tool

2.1 Correct use

The blind rivet nut tool is designed exclusively for setting blind rivet nuts and blind rivet nut studs as described in the operating instructions.
Please comply with all safety instructions!

2.2 Safety instructions

- The blind rivet nut setting tool should only be used for setting blind rivet nuts and blind rivet nut studs.
- Improper use when winding down and setting nuts poses a risk of crushing your fingers!
- Do not overload the blind rivet nut setting tool; work within the prescribed work capacity.
- Do not exceed the permitted operating pressure.
- Do not rivet outside of riveting holes!
- Check connecting lines for compressed air at regular intervals for force fit and tightness.

- Disconnect the device from the compressed air network prior to carrying out any maintenance work to the blind rivet nut setting tool, changing threaded mandrels or when not in use.
- When working with the tool, always wear protective goggles. Personal protection like clothes, gloves, safety helmet, ear protection and anti-fall protection are highly recommended.
- When depositing the blind rivet setting tool, make sure that it cannot fall.
- Repair work must be carried out by skilled personnel. Use genuine parts for repair at all times. In case of doubt, always send the complete blind rivet nut setting tool back to the supplier or to GESIPA®.
- Avoid excessive contact with hydraulic oil. If irritation of the skin occurs, wash affected skin parts thoroughly with water!
- Dispose of hydraulic waste oil according to current regulations.

2.3 Work capacity

The blind rivet nut setting tool is designed for setting blind rivet nuts and blind rivet bolts M3 to M10 made of any kind of material, as well as M12 in aluminium and steel.

2.4 Technical data

Weight:	2.4 kg
Working pressure:	5 to 7 bar
Gun stroke:	max. 10 mm
Hose connection:	Ø 6 mm (1/4“)
Compressed air consumption:	c. 2 - 4 litre/setting process (dependent on nut size)
Setting force at 5 bar:	18.5 kN
Hydraulic oil:	ca. 30 ml (ISO VG 32 to 46)
Noise emission Lpa:	75 dB, Measurement uncertainty K=3dB
Vibration:	< 2.5 m/s², Measurement uncertainty K=1.5 m/s²
Compressed air quality:	Filtered

2.5 Equipment/accessories

Threaded mandrels and nosepiece:	M4, M5, M6 and M8
Tool:	Hexagon screw driver SW3 2 x double open-end spanner SW24/27
Suspension Loop:	Extendable from device top
Hydraulic oil:	1 bottle of hydraulic oil 100 ml 1 oil filling container

www.irivet.ru

3. Starting procedure

Prior to operating the blind rivet nut setting tool, attach the relevant threaded mandrel with nosepiece to match the thread size.

3.1 How to change a threaded mandrel

- Disconnect the blind rivet nut setting tool from the compressed air network.
- Detach locknut 1, using double open-end spanner SW27.
- Unscrew nosepiece 2 with locknut 1
- Push slide 11 back all the way to buffer and hold tight
- Unscrew threaded mandrel 3
- Insert new threaded mandrel of same size (if worn out) or threaded mandrel of matching thread size all the way to buffer.
- Release slide. At the same time make sure that the threaded mandrel is locked safely inside the hexagon socket of the slide. If required, unscrew threaded mandrel slightly until the slide locks.
- Insert a matching nosepiece for each thread size using locknut 1 and lock loosely with locknut, using a double open-ended spanner.
- Set threaded mandrel length "X", as described under item 3.2.

3.2 How to set threaded mandrel length "X"

- Detach locknut 1, using double open-end spanner.
- Adjust threaded mandrel length "X", according to nut length (see image 4) by turning nosepiece 2.
- Make full use of depth of thread for closed blind rivet nuts (image 4).
- Secure nosepiece 2 using locknut 1

The setting stroke of the blind rivet nut setting tool is **not** affected by adjusting the mandrel length.

4. How to adjust the setting stroke or setting force

The blind rivet nut setting tool may **either** be operated using a firmly adjusted setting stroke **or** by using a setting force that is adjusted to the respective nut size.

CAUTION! Please note!

When should you use a firmly adjusted setting stroke?
If the same blind rivet nut size and length are always set into the same material thickness, it is possible to apply a constant setting stroke.

When should you use a setting force that is adjusted to the respective nut size?

- When a blind rivet nut size (e.g. M6) is set into materials of varying thicknesses.
- A blind rivet nut size of varying lengths (e.g. M6x15.5 or M6x18) is set into materials of varying thicknesses.

This setting should be used as a priority.

4.1 How to adjust the setting stroke

To adjust the setting stroke, follow the 4 operational steps below:

1. Insert set screw with colour scale 9 (picture 2) all the way to the buffer (blue colour ring visible in display window) using the hexagon screw driver SW4 provided.
2. Press down completely green release button 6
3. Adjust the setting stroke according to stroke scale 5 by turning stroke adjuster 4 (1 line of the stroke scale equals 1 mm of setting stroke).
4. Release the green release button. If release button 6 does not lock of its own accord, turn the stroke adjuster carefully until stroke adjuster 4 is locked.

The values for the setting stroke shown on the table below merely constitute reference points and depend greatly on the thickness of the material! The setting stroke to be set must be determined by carrying out trials with the exact material thickness. Use a different nut for each trial!

www.irivet.ru

Reference points for setting stroke

Thread size	Setting stroke	
	min	max
M3	1.5	2
M4	1.5	2
M5	2	3
M6	2.5	3.5
M8	2.5	3.5
M10	3	4
M12	3.5	4.5

4.2 How to adjust the setting force

The FireFox® 2 is adjusted to a setting force suitable for the respective blind rivet nut size (e.g. M6). This ensures that all blind rivet nuts of certain thread dimensions (e.g. M6) but with differing nut lengths are always set precisely as intended into materials of varying thicknesses.

To adjust the setting force, follow the sequence of operations below:

1. Press down completely green release button 6.
2. Adjust the setting stroke to maximum stroke of 10 mm (until the blue mark on the stroke scale becomes visible!)
3. The setting force can be pre-set using the enclosed colour code chart. The right colour code can be selected on the colour code chart according to the nut sizes and the nut materials (e.g. M6 – steel ⇨ colour code red)
4. Using the enclosed hexagon screw driver SW4, turn the set screw with colour scale 9 to the selected colour code in the display window.
5. Winding down the blind rivet nut to be set (see item 5.1). Insert the blind rivet nut into the material to be riveted. For materials of varying thicknesses it is advisable to select maximum material thickness.
6. Trigger a setting sequence by pressing the activation button. Then check the nut you have set:
   - If the nut is not sufficiently deformed during this process, use the hexagon screw driver SW4 to screw in the set screw with colour scale 9 by c. 0.5 rotations. Then repeat the setting sequence with a new nut and check once again.
   - If the nut becomes too deformed (e.g. difficult to remove; nut thread deformed), the set screw 9 should be unscrewed about 1 rotation. Then repeat the setting sequence with a new nut and check once again.

Turning in setscrew 9 increases the setting force of the rivet tool; unscrewing decreases the setting force!

5. Sequence of operations

5.1 How to wind down a nut

- Position blind rivet nut without tilting on threaded mandrel 3.
- Then use the blind rivet nut setting tool to press the threaded mandrel towards the blind rivet tool. This action will automatically start the winding down process.
- Do not press activation button!
- Keep a tight hold of the blind rivet nut throughout the winding down process until the blind rivet nut rests on nosepiece 2. The winding down process finishes automatically.

5.2 How to set the blind rivet nut

- Insert the wound down blind rivet nut all the way into the drilled hole of the work piece.
- Start the setting process by pressing the activation button. **Hold down activation button!**
- The removal process will start automatically once either the set setting stroke or the set setting force have been reached (See also item 4!). The removal process will continue as long as the activation button is being held down. Do not release activation button before the threaded mandrel has been completely removed from the set nut.

5.3 How to remove a nut manually by turning

- If the activation button is released too early after a setting process resulting in the threaded mandrel not being removed completely or if the nut was positioned askew, you have the option of starting a manual removal button 7 (see image 1).
- If it proves impossible to remove the threaded mandrel with the help of removal button 7 (for instance in the case of a severely deformed nut), you have the option of removing the threaded mandrel manually by turning. To loosen the threaded mandrel, insert the supplied hexagon screw driver SW4 into hexagon socket 8 at the air outlet of the air motor (see image 1) and turn it anti-clockwise.

www.irivet.ru

6. Maintenance and care

The blind rivet nut setting tool must be kept in a dry place. Worn threaded mandrels must be replaced as described under item 3.1, as required. After prolonged use it may become necessary to top up or replace the hydraulic oil. To top up the hydraulic oil follow the sequence of operations below:

- Disconnect the blind rivet nut setting tool from the compressed air network
- Unscrew nosepiece 2 using locknut 1
- Set setting stroke to 10 mm (all lines on stroke scale 5 are visible)
- Unscrew oil refill screw no. 12 and seal no. 13 using Torx screw driver T20
- Unscrew supplied oil refill container with lid
- Connect blind rivet nut setting tool to compressed air network and actuate trigger; then detach blind rivet nut setting tool from compressed air network
- Drain waste oil from oil refill container
- Fill oil refill container up to mark with hydraulic oil
- Move the thrust piston unit at threaded mandrel 3 carefully to and fro by hand until the oil starts to escape bubble-free; push thrust piston unit all the way back to the buffer and leave it there.
- Unscrew oil refill tank and screw in oil refill screw 12 with seal 13
- Connect the blind rivet nut setting tool to compressed air network
- Loosen oil refill screw 12 carefully by c. 2 rotations; thrust piston unit will move slowly into front end position. Catch any escaping oil with a rag!
- Tighten oil refill screw 12
- Screw down nosepiece 2, using locknut 1

Regular maintenance will extend the service life of your high-quality GESIPA® tools and they should be serviced at least every 2 years by an authorised workshop or by GESIPA® Service. For tools that are used intensively, we recommend servicing ahead of schedule.

7. Troubleshooting

Not possible to wind down nut

Cause	Remedy
Nut thread defective	Use new nut
Threaded mandrel defective	Replace threaded mandrel (see item 3.1)
Winding process does not start	Increase setting stroke to minimum

www.irivet.ru

Nut is not removed by turning

Cause	Remedy
Nut thread deformed	Setting stroke or setting force too great ⇨ reduce (see item 4)
Removal period too short	Hold activation button down for longer
Nut not automatically removed	Keep holding down activation button until nut has been automatically removed
Setting stroke or setting force not reached	Keep holding down activation button until nut has been automatically removed; if necessary, refil hydraulic oil Increase network pressure (max. 7 bar)
Nut stuck on threaded mandrel	Reduce setting force (see item 4) Remove by pressing the removal button 7 or unscrew with the help of a hexagon screw driver (see item 5.3)

Set nut is loose

Cause	Remedy
Setting stroke "Y" too short	Increase setting stroke (see item 4.1)
Setting force too low	Increase setting force (see item 4.2)
Air pressure too low	Increase air pressure to 5-7 bar

8. Notes on environment

Dispose of hydraulic waste oil according to current environmental regulations.
Observe regulations about dangerous substances!

9. Warranty

The applicable terms and conditions of guarantee shall apply and can be viewed under following link: www.gesipa.com/agb

www.irivet.ru

10. Declaration of Conformity EC

We hereby declare that the design and construction of the tool named below, as well as the version that we have put on the market, complies with applicable fundamental health and safety requirements stipulated in EU directives. Tool modifications made without our authorisation shall render this declaration void. The safety information in the product documentation provided must be observed. This document must be retained.

FireFox® 2

- 2006/42/EG
- DIN EN ISO 12100:2011
- DIN EN ISO 11148-1:2012
- DIN EN 82079-1:2013

ppa. Dr. Richard Gärtner
(Technical Director)

Authorised documentation representative:
GESIPA Blindniettechnik GmbH
Nordendstraße 13-39
D-64546 Mörfelden-Walldorf

www.irivet.ru

www.irivet.ru

(DE) **Ihr Fachhändler**

(GB) **Your dealer**

(FR) **Cachet de revendeur**

(ES) **Proveedor**

(IT) **Rivenditore autorizzato**

(NL) **Uw vakhandelaar**

(DK) **Deres forhandler**

(SE) **Leverantör**

(FI) **Deres forhandler**

(NO) **Jälleenmyyjä**

(PT) **O vosso distribuidor**

(CZ) **Vás obchodník**

(GR) **Το ειδικό σας κατάστημα**

(HU) **Az Ön szaküzlete**

(PL) **Wasz dystrybutor**

(CN) 经销商

(RU) **Ваш дилер**

02/2018 - 1431810