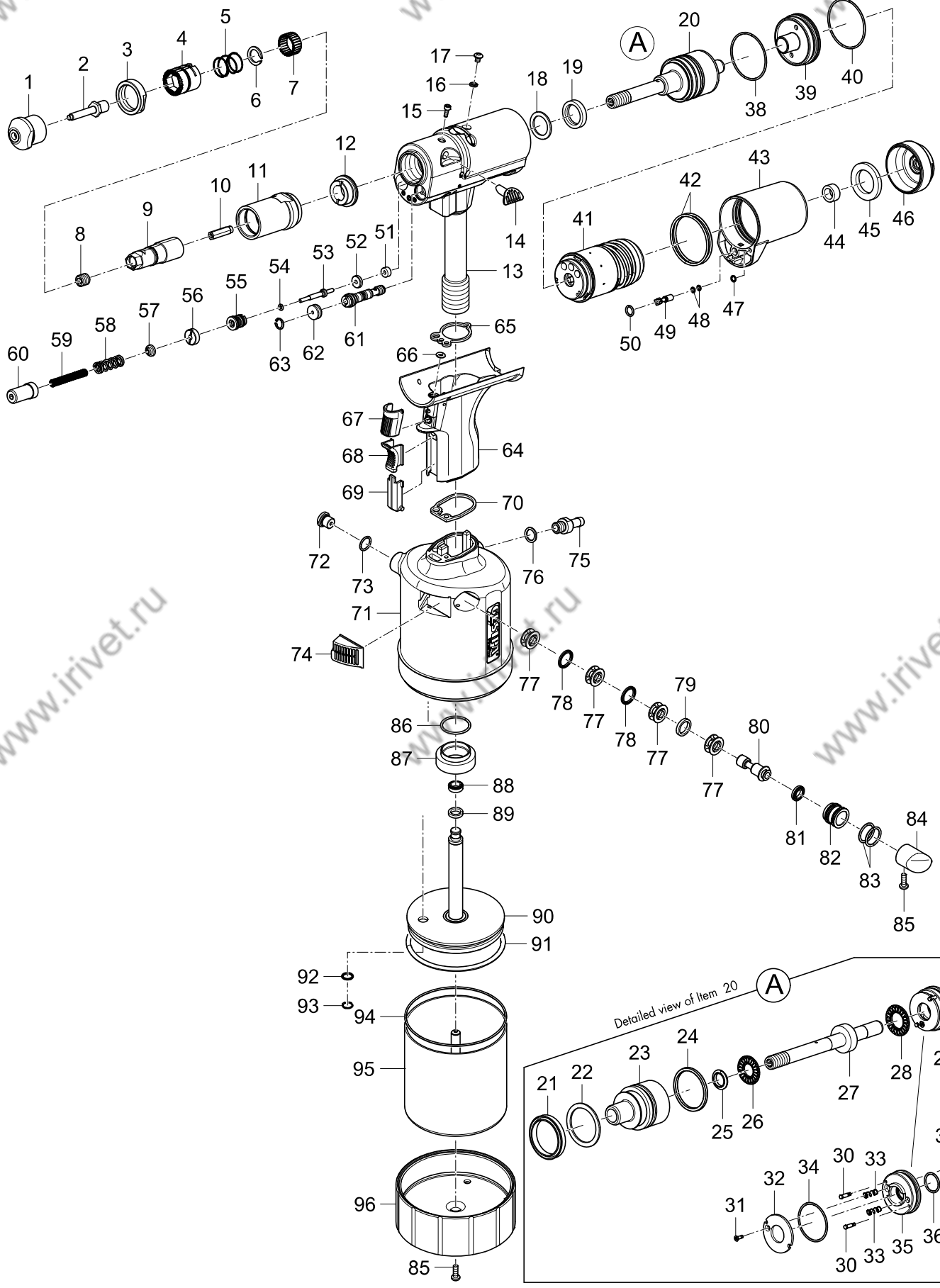

www.irivet.ru

Spare part no.	Article no.	Designation
1 •	143 6218	Nosepiece M 3
	143 6219	Nosepiece M 4
	143 6220	Nosepiece M 5
	143 6221	Nosepiece M 6
	143 6222	Nosepiece M 8
	143 6223	Nosepiece M 10
	143 6224	Nosepiece M 12
	143 6256	Nosepiece 6-32 UNC
	143 6257	Nosepiece 8-32 UNC
	145 8113	Nosepiece 10-24 UNC
	143 6258	Nosepiece 10-32 UNF
	143 6259	Nosepiece 1/4"-20 UNC
	143 6260	Nosepiece 5/16"-18 UNC
	143 6261	Nosepiece 3/8"-16 UNC
2	143 6211	Threaded mandrel M 3
	143 6212	Threaded mandrel M 4
	143 6213	Threaded mandrel M 5
	143 6214	Threaded mandrel M 6
	143 6215	Threaded mandrel M 8
	143 6216	Threaded mandrel M 10
	143 6217	Threaded mandrel M 12
	143 6249	Threaded mandrel 6-32 UNC
	143 6250	Threaded mandrel 8-32 UNC
	143 6251	Threaded mandrel 10-24 UNC
	143 6252	Threaded mandrel 10-32 UNF
	143 6253	Threaded mandrel 1/4"-20 UNC
	143 6254	Threaded mandrel 5/16"-18 UNC
	143 6255	Threaded mandrel 3/8"-16 UNC
3	143 6193	Locking ring
4	145 8123	Slider complete
5	143 6247	Compression spring
6	144 6189	Snap ring
7	144 6190	Needle ring
8	144 6187	Stud bolt
9	143 6179	Driving pin
10	143 6201	Hexagonal rod
11	143 6384	Steel head sleeve
12	143 6385	Sleeve
13	145 8128	Tool head assembled
14	144 6204	Cap
15	144 5427	Allen screw
16	143 5612	Sealing ring M4
17	144 6013	Oil screw plug
18	143 6230	Supporting ring
19	143 6234	Rod seal
20	145 8126	Draw bar complete
21	143 6227	Piston seal
22	143 6229	Supporting ring
23	143 6204	Draw bar
24	143 6231	Seal
25	143 5236	Seal kit
26	144 6191	Axial needle bearing
27	143 6296	Tie anchor complete
28	144 5794	Axial needle bearing
29	145 8125	Closure cover, complete
30	143 6183	Stud bolt
31	144 6188	Screw
32	143 6205	Stop disc
33	143 6293	Spring
34	143 6238	O-ring
35	143 6197	Closure
36	143 6239	O-ring

Spare part no.	Article no.	Designation
37	145 8124	Valve key 4, complete
38	143 6236	O-ring
39	143 6198	End closure
40	143 6237	O-ring
41	143 6168	Air motor complete
42	143 6243	O-ring
43	143 6170	Adapter
44	143 6173	Absorber disc 1
45	143 6174	Absorber disc 2
46	143 6175	Noise suppressor cover
47	143 6242	O-ring
48	143 6291	O-ring
49	143 6292	Valve key 5
50	143 5519	O-ring
51	143 6233	Rod seal
52	143 6176	Pressure disc
53	143 6177	Plunger
54	143 5644	O-ring
55	145 8127	Insert complete
56	143 6190	Threaded ring
57	143 6178	Bevel washer
58	144 6192	Compression spring
59	143 6245	Compression spring
60	145 1093	Spring compressor complete
61	143 6297	Distributing valve complete
62	145 1053	Stopper complete
63	144 5285	Snap ring
64	145 8122	Grip, complete
65	143 5472	Flat gasket 1
66	143 6241	O-ring
67	144 6025	Activation button
68	143 5642	Slider
69	143 6169	Orifice
70	143 5480	Flat gasket 2
71	145 8118	Air cylinder 2, complete
72	143 5484	O-ring
73	145 7750	Pressure relief valve, complete
74	145 7862	Silencer complete
75	144 6030	Sealing ring
76	143 5667	Hose fitting
77	143 5648	Spacer cage
78	143 5647	Airzet rod seal
79	143 6248	Washer
80	143 6187	Rod seal
81	143 5675	Lip ring
82	143 5652	Piston housing
83	143 5688	O-ring
84	144 6075	Stopper
85	144 5773	Housing screw short
86	143 5486	O-ring
87	143 5492	Alu nut
88	143 6226	Piston seal
89	143 6235	Guide ring
90	145 8116	Air piston 2, complete
91	143 5834	O-ring
92	143 5635	Airzet rod seal
93	144 6082	V-profile ring JV15
94	143 5839	O-ring
95	145 8114	Cylinder 2, complete
96	143 5761	Bottom
	144 5294	Hydraulic oil refill bottle, 100 ml

• Детали подлежащие износу.

IRIVET
Компания iRivet
ООО "АЙРИВЕТ"
www.irivet.ru
Тел: (495) 135 4201
Тел: +7 916 922 6789
Почта: order@irivet.ru
GESIPA®