STANLEY
Engineered Fastening

INSTRUCTION MANUAL

ProSet® PB3400

ProSet® PB2500

- (GB) Battery Power Tool
- (DA) Batteridrevet værktøj
- (DE) Akkuwerkzeug
- (ES) Herramienta de batería
- (FI) Akkutyökalu
- (FR) Outil électrique alimenté par batterie
- (IT) Utensile a batteria
- (NL) Accugereedschap
- (NO) Batteridrevet verktøy
- (PL) Elektronarzędzie akumulatorowe
- (PT) Ferramenta eléctrica com bateria
- (SV) Batteridrivet verktyg

ProSet® PB2500 blind rivet tool
ProSet® PB3400 structural rivet tool

Battery Power Tool

STANLEY
Assembly Technologies

www.irivet.ru

PB2500 (Ref. Section 2.4)

Figure 1

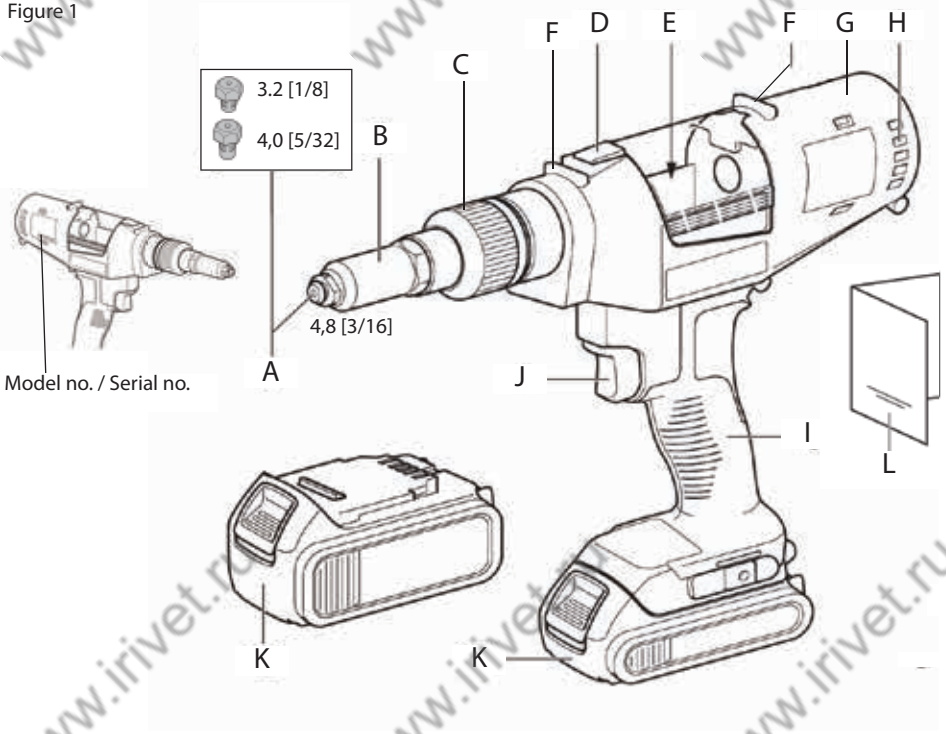

Figure 2

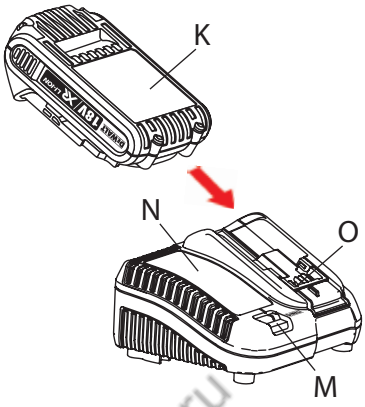

Figure 3

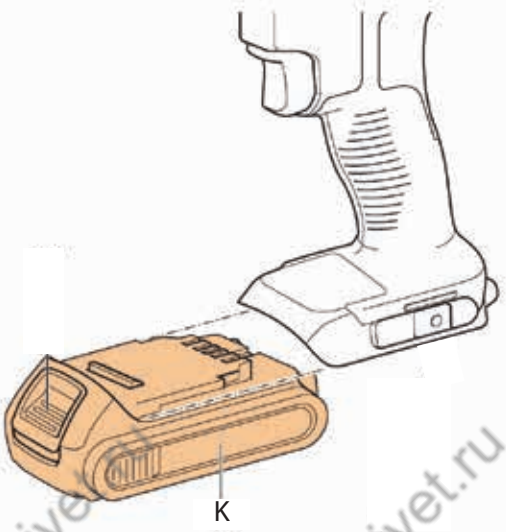

www.irivet.ru

PB2500 (Ref. Section 2.4)

Figure 4

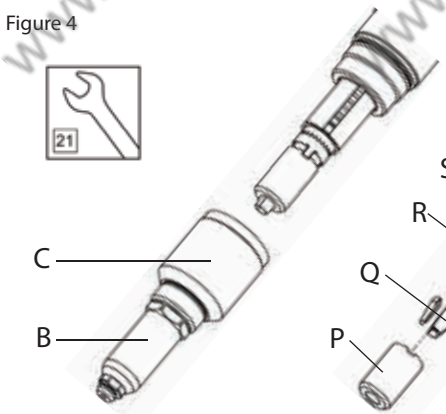

Figure 5

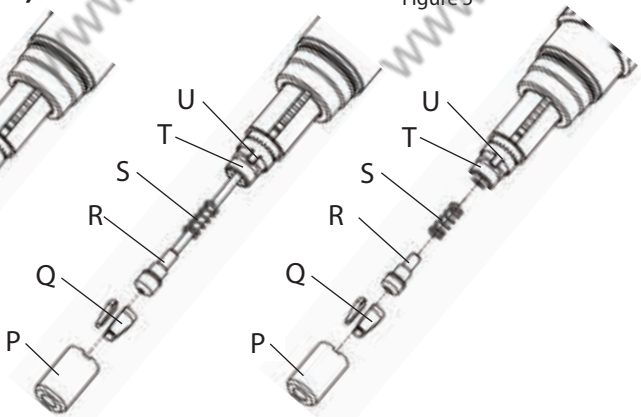

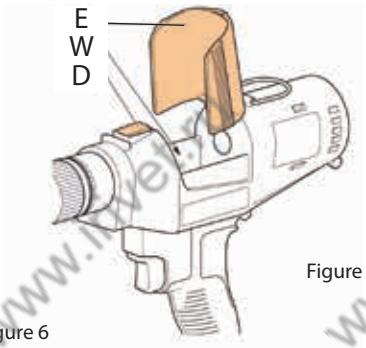

Figure 6

Figure 6a

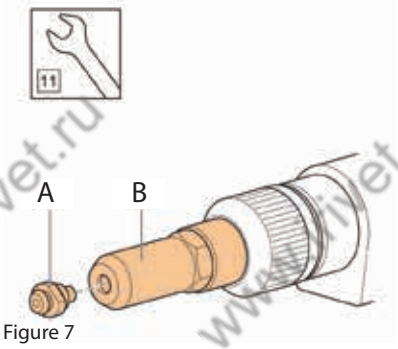

Figure 7

Figure 8

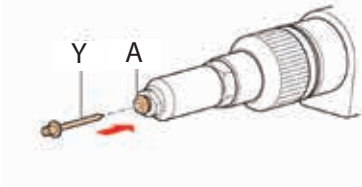

Figure 9

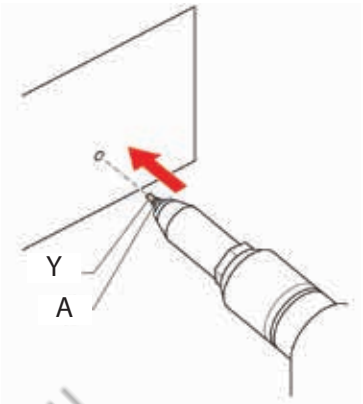

Figure 10

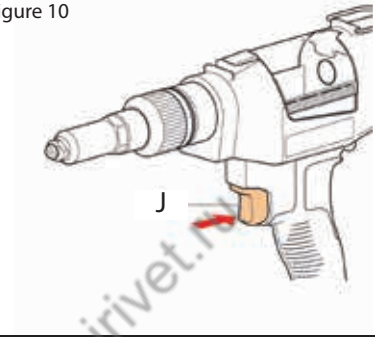

www.irivet.ru

©2016 Stanley Black & Decker
All rights reserved.
The information provided may not be reproduced and/or made public in any way and through any means (electronically or mechanically) without prior explicit and written permission from STANLEY Engineered Fastening. The information provided is based on the data known at the moment of the introduction of this product. STANLEY Engineered Fastening pursues a policy of continuous product improvement and therefore the products may be subject to change. The information provided is applicable to the product as delivered by STANLEY Engineered Fastening. Therefore, STANLEY Engineered Fastening cannot be held liable for any damage resulting from deviations from the original specifications of the product.

The information available has been composed with the utmost care. However, STANLEY Engineered Fastening will not accept any liability with respect to any faults in the information nor for the consequences thereof. STANLEY Engineered Fastening will not accept any liability for damage resulting from activities carried out by third parties. The working names, trade names, registered trademarks, etc. used by STANLEY Engineered Fastening should not be considered as being free, pursuant to the legislation with respect to the protection of trade marks.

CONTENT

Note: Drawings referring to the ProSet® PB2500 are on the Fold out of the Front Cover
Drawings referring to the ProSet® PB3400 are on the Fold out of the Back Cover

1. SAFETY DEFINITIONS 5
1.1 General Safety 5
1.2 Power Tool Use and Care 5
1.3 Important Safety Instructions for All Battery Chargers 6
1.4 Important Safety Instructions for All Battery Packs 7
1.5 Specific Safety Instructions for Lithium-Ion (Li-Ion) 8
1.6 Residual Risks 8
1.7 Labels and Icons 8

2. SPECIFICATION 9
2.1 Technical Data 9
2.2 Placing Specification 11
2.3 Package Contents 11
2.4 Main Components list 12
2.5 Optional Accessories 12

3. TOOL USE & SET UP 13

4. OPERATING INSTRUCTIONS 13
4.1 Nose Equipment 13
4.2 Chargers 14
4.3 Battery Packs 15

5. OPERATING PROCEDURE 15
5.1 Proper Hand Position 16
5.2 Tool Operation 16

6. SERVICING THE TOOL 17
6.1 Maintenance frequency 17
6.2 Cleaning 17
6.3 Spare Parts – Tools 18
6.4 Rechargeable Battery Pack 18
6.5 Protecting the Environment 18

7. EC-DECLARATION OF CONFORMITY 19

8. PROTECT YOUR INVESTMENT 20
8.1 POP®Avdel® Rivet Tool Warranty 20
8.2 Register Your Blind Rivet Tool online 20

This instruction manual must be read by any person installing or operating this tool with particular attention to the following safety rules.

1. SAFETY DEFINITIONS

The definitions below describe the level of severity for each signal word. Please read the manual and pay attention to these symbols.

DANGER*:** Indicates an imminently hazardous situation which, if not avoided, ***will result in ***death or serious injury***.

CAUTION: Indicates a potentially hazardous situation which, if not avoided, ***may*** result in ***minor or moderate injury***.

WARNING: Indicates a potentially hazardous situation which, if not avoided, ***could*** result in ***death or serious injury***.

NOTICE: Indicates a practice ***not related to personal injury*** which, if not avoided, ***may*** result in ***property damage***.

Denotes risk of electric shock

Denotes risk of fire

Improper operation or maintenance of this product could result in serious injury and property damage. Read and understand all warnings and operating instructions before using this equipment. When using power tools, basic safety precautions must always be followed to reduce the risk of personal injury.

1.1 GENERAL SAFETY

WARNING! Read all safety warnings and all instructions. Failure to follow the warnings and instructions may result in electric shock, fire and/or serious injury.

SAVE ALL WARNINGS AND INSTRUCTIONS FOR FUTURE REFERENCE

The term "power tool" in the warnings refers to your mains-operated (corded) power tool or battery-operated (cordless) power tool.

- *Do not use outside the design intent of Placing STANLEY Engineered Fastening Blind Fasteners.*
- *Use only parts, fasteners, and accessories recommended by the manufacturer.*
- *Use Power Tool only with specifically designated battery packs.*

1.2 POWER TOOL USE AND CARE

- *The tool must be maintained in a safe working condition at all times and examined at regular intervals for damage and function by trained personnel. Any dismantling procedure will be undertaken only by trained personnel. Do not dismantle this tool without prior reference to the maintenance instructions.*
- *Do not modify the tool in any way. Any modification to the tool is undertaken by the customer and will be the customer's entire responsibility and void any applicable warranties.*
- *Disconnect the battery from the tool before performing any maintenance, attempting to adjust, fit or remove a nose assembly.*
- *Prior to use, check for misalignment or binding of moving parts, breakage of parts, and any other condition that affects the tool's operation. If damaged, have the tool serviced before using. Remove any adjusting key or wrench before use.*
- *Prior to use, inspect battery for damage. Do not drop battery. A sharp impact may cause internal damage and lead to premature battery failure.*

- *Keep work area clean and well lit.*
- *Dress properly. Do not wear loose clothing or jewelry. Keep your hair, clothing and gloves away from moving parts. Loose clothes, jewelry or long hair can be caught in moving parts.*
- *Adopt a firm footing or a stable position before operating the tool.*
- *Operators and others in work area must wear ANSI Z87.1 CAN/CSA Z94.3 or other approved safety glasses with side shields. Always wear safety glasses and ear protection during operation.*
- *Adequate clearance is required for the tool operator's hands before proceeding.*
- *Do not operate a tool that is directed towards any person(s).*
- *DO NOT operate tool with the nose housing removed.*
- *Do not operate the tool or the charger in an explosive atmosphere or environment allowing exposure to combustible fluids or gasses.*
- *Do not operate the tool or the charger in an environment allowing exposure to moisture or rain to avoid risk of electric shock.*
- *Do not abuse the tool by dropping or using it as a hammer.*
- *Keep dirt and foreign matter out of the air vents of the tool as this will cause the tool to malfunction.*
- *Keep tool handles dry, clean, and free from oil and grease.*
- *When carrying the tool from place to place keep hands away from the trigger to avoid inadvertent activation.*
- *Never leave installation tool unattended.*
- *Disconnect battery when tool is not in use.*

1.3 IMPORTANT SAFETY INSTRUCTIONS FOR ALL BATTERY CHARGERS

***SAVE THESE INSTRUCTIONS**: This manual contains important safety and operating instructions for compatible battery chargers (refer to Technical Data).*

- *Before using charger, read all instructions and cautionary markings on charger, battery pack, and product using battery pack.*

***WARNING**: Shock hazard. Do not allow any liquid to get inside charger. Electric shock may result.*

***WARNING**: We recommend the use of a residual current device with a residual current rating of 30mA or less.*

***CAUTION**: Burn hazard. To reduce the risk of injury, charge only DEWALT®/POP®Avdel® rechargeable batteries. Other types of batteries may burst causing personal injury and damage.*

***CAUTION**: Children should be supervised to ensure that they do not play with the appliance.*

***NOTICE**: Under certain conditions, with the charger plugged into the power supply, the exposed charging contacts inside the charger can be shorted by foreign material. Foreign materials of a conductive nature such as, but not limited to, steel wool, aluminium foil or any build-up of metallic particles should be kept away from charger cavities. Always unplug the charger from the power supply when there is no battery pack in the cavity. Unplug charger before attempting to clean*

- *DO NOT attempt to charge the battery pack with any chargers other than the ones in this manual. The charger and battery pack are specifically designed to work together.*
- *These chargers are not intended for any uses other than charging DEWALT®/POP®Avdel® rechargeable batteries. Any other uses may result in risk of fire, electric shock or electrocution.*
- *Do not expose charger to rain or snow.*

- *Pull by plug rather than cord when disconnecting charger. This will reduce risk of damage to electric plug and cord.*
- *Make sure that cord is located so that it will not be stepped on, tripped over, or otherwise subjected to damage or stress.*
- *Do not use an extension cord unless it is absolutely necessary. Use of improper extension cord could result in risk of fire, electric shock, or electrocution.*
- *Do not place any object on top of charger or place the charger on a soft surface that might block the ventilation slots and result in excessive internal heat. Place the charger in a position away from any heat source. The charger is ventilated through slots in the top and the bottom of the housing.*
- *Do not operate charger with damaged cord or plug—have them replaced immediately.*
- *Do not operate charger if it has received a sharp blow, been dropped, or otherwise damaged in any way. Take it to an authorised service centre.*
- *Do not disassemble charger; take it to an authorised service centre when service or repair is required. Incorrect reassembly may result in a risk of electric shock, electrocution or fire.*
- *Disconnect the charger from the outlet before attempting any cleaning. This will reduce the risk of electric shock. Removing the battery pack will not reduce this risk.*
- *NEVER attempt to connect two chargers together.*
- *The charger is designed to operate on standard household electrical power (refer to charger specifications). Do not attempt to use it on any other voltage. This does not apply to the vehicular charger.*

1.4 IMPORTANT SAFETY INSTRUCTIONS FOR ALL BATTERY PACKS

When ordering replacement battery packs, be sure to include catalog number and voltage.

The battery pack is not fully charged out of the carton. Before using the battery pack and charger, read the safety instructions below. Then follow charging procedures outlined.

READ ALL INSTRUCTIONS

- *Do not charge or use battery in explosive atmospheres, such as in the presence of flammable liquids, gases or dust. Inserting or removing the battery from the charger may ignite the dust or fumes.*
- *Never force battery pack into charger. Do not modify battery pack in any way to fit into a non-compatible charger as battery pack may rupture causing serious personal injury.*
- *Charge the battery packs only in DEWALT®/POP®Avdel®.*
- *DO NOT splash or immerse in water or other liquids.*
- *Do not store or use the tool and battery pack in locations where the temperature may reach or exceed 40 ˚C (104 ˚F) (such as outside sheds or metal buildings in summer).*
- *When battery pack is not in use, keep it away from other metal objects like paper clips, coins, keys, nails, screws or other small metal objects that can make a connection from one terminal to another.*
- *Do not discard batteries into water.*

***WARNING**: Never attempt to open the battery pack for any reason. If battery pack case is cracked or damaged, do not insert into charger. Do not crush, drop or damage battery pack. Do not use a battery pack or charger that has received a sharp blow, been dropped, run over or damaged in any way (i.e., pierced with a nail, hit with a hammer, stepped on). Electric shock or electrocution may result. Damaged battery packs should be returned to service centre for recycling.*

***WARNING:** Fire hazard. Do not store or carry the battery pack so that metal objects can contact exposed battery terminals. When transporting individual battery packs, make sure that the battery terminals are protected and well insulated from materials that could contact them and cause a short circuit.*

***CAUTION**: When not in use, place tool on its side on a stable surface where it will not cause a tripping or falling hazard. Some tools with large battery packs will stand upright on the battery pack but may be easily knocked over.*

1.5 SPECIFIC SAFETY INSTRUCTIONS FOR LITHIUM-ION (LI-ION)

1. ***Do not incinerate the battery pack even if it is severely damaged or is completely worn out.*** *The battery pack can explode in a fire. Toxic fumes and materials are created when lithium-ion battery packs are burned.*
2. ***If battery contents come into contact with the skin, immediately wash area with mild soap and water.*** *If battery liquid gets into the eye, rinse water over the open eye for 15 minutes or until irritation ceases. If medical attention is needed, the battery electrolyte is composed of a mixture of liquid organic carbonates and lithium salts.*
3. ***Contents of opened battery cells may cause respiratory irritation.*** *Provide fresh air. If symptoms persists, seek medical attention.*

WARNING*: Burn hazard. Battery liquid may be flammable if exposed to spark or flame.*

1.6 RESIDUAL RISKS

In spite of the application of the relevant safety regulations and the implementation of safety devices, certain residual risks cannot be avoided. These are:

- Impairment of hearing
- Risk of personal injury due flying particles
- Risk of burns due to accessories becoming hot during operation.
- Risk of personal injury due to prolonged use.

1.7 LABELS AND ICONS

Markings on Tool

DATE CODE POSITION: The Date Code, which includes the year, month and location of manufacture, is printed into the housing surface that forms the mounting joint between tool and battery.

Labels on charger and battery pack

In addition to the pictographs used in this manual, the labels on the charger and the battery pack show the following pictographs.

	Read instruction manual before use.		Do not expose to water.
	Read instruction manual before use.		Have defective cords replaced immediately.
	Battery charging.		Charge only between 4 °C and 40 °C.
	Battery charged.		Discard the battery pack with due care for the environment.
	Hot/cold pack delay.		Do not incinerate the battery pack.
	Charges Li-ion battery packs.		See Technical Data for charging time.
	Only for indoor use.		Do not charge damaged battery packs.

	Charge DEWALT®/POP®Avdel® battery packs only with designated DEWALT®/ POP®Avdel® chargers. Charging battery packs other than the designated DEWALT®/ POP®Avdel® batteries with a DEWALT®/ POP®Avdel® charger may make them burst or lead to other dangerous situations.		Your DEWALT® charger is double insulated in accordance with EN60335; therefore no earth wire is required.

STANLEY Engineered Fastening policy
is one of continuous product development and improvement
and we reserve the right to change the specification
of any product without prior notice.

2. SPECIFICATIONS

UNDER NO CIRCUMSTANCES SHOULD ANY MAINTENANCE OR SERVICING BE CONDUCTED APART FROM NOSE EQUIPMENT CHANGE.

2.1 TECHNICAL DATA

2.1.1.

		ProSet® PB2500	ProSet® PB3400
Voltage	V	18 nom /20 max	18 nom /20 max
Type		2	2
Battery Type		Li-ion	Li-ion
Weight (without battery pack)	kg	1.35	1.77
Lpa (sound pressure)	dB(A)	74	77
Kpa (sound pressure uncertainty)	dB(A)	3	4
Lwa (sound power)	dB(A)	85	88
Kwa (sound power uncertainty)	dB(A)	3	4

Vibration total values (triax vector sum) determined according to EN 60745:			
Vibration emission value ah			
ah =	m/s2	< 2.5	< 2.5
Uncertainty K =	m/s2	1.5	1.5

2.1.2.

Model		PB2500 2.0 Ah	PB2500 4.0Ah	PB3400 2.0Ah	PB3400 4.0Ah
Weight	kg [lbs]	1.7 [3.75]	2.0 [4.41]	2.1 [4.63]	2.4 [5.29]
Length	mm [in]	320 [12.6]	320 [12.6]	336 [13.2]	336 [13.2]
Height	mm [in]	240 [9,4]	260 [10,2]	255 [10.0]	255 [10.0]
Stroke	mm [in]	25 [0.984]	25 [0.984]	30 [1.181]	30 [1.181]
Pulling Force	N [lbf]	8,500 [1911]	8,500 [1911]	18,000 [4047]	18,000 [4047]
Rivet Range	nom.dia. mm [in]	ø 2,4 [3/32"]) thru ø 4,8 [3/16"])		ø 4,8 [3/16"] thru ø 6,4 [1/4"]	

2.1.3.

Battery Pack*				
Battery type		Li-ion		
Voltage	V_{DC}	18 nom /20 max		
Capacity	Ah	2.0/4.0		
Weight	Kg	0.40/0.61		
Charging duration**	min	30/60		
Charger*		**NA**	**JP**	**QW/GB/XE/XD**
Battery type		Li-ion	Li-ion	Li-ion
Battery type Mains voltage	V_{AC}	120	100	230
Input frequency	Hz	60	50/60	50
Weight	kg	0.50	0.50	0.50

Fuses		
Europe	230 V tools	10 Amperes. mains
U.K. & Ireland	230 V tools	3 Amperes. in plugs

**PB Series tools are compatible with DEWALT®/POP®Avdel® 18V nom/20V max Li-Ion slide type batteries*
*** Charging duration is based on the DCB115 DEWALT® Charging units*

2.1.4.

Estimated Rivets per Charge			
	Nom. Rivet Dia. mm [in]	Battery 2.0Ah	Battery 4.0Ah
PB2500	ø 2,4 [3/32]	1,700	3,400
	ø 3,2 [1/8]	1,600	3,200
	ø 4,0 [5/32]	1,400	2,800
	ø 4,8 [3/16]	1,200	2,400
PB3400	ø 4,8 [3/16]	1,000	2,000
	ø 6.4 [1/4]	500	1,000

Note: These values are listed as a guide only and are estimates based on a fully charged battery. Results may vary depending on rivet material, tool/battery condition and work environment.

www.irivet.ru

2.2 PLACING SPECIFICATIONS

Rivet Type	PLACING CAPACITY										
								PB3400			
	2.4 mm [3/32´´]	3.0 mm	3.2 mm [1/8´´]	4.0 mm [5/32´´]	4.3 mm	4.8 mm [3/16´´]	5.0/ 6.0/ 7.0 mm	4.8 mm [3/16´´]	6.0 mm	6.4 mm [1/4´´]	8.0/ 9.0 mm
OPEN END	●	●	●	●		●		●		●	
CLOSED END			●	●		●		●		●	
AVEX®/ STAVEX®		●	●	●		●		●		●	
AVINOX®/ AVIBULB®			●	●		●		●	●	●	
HR/HT			●	●		●		●		●	
INTERLOCK®						●				●	
HEMLOK®										●	
KLAMP-TITE®/ KTR						●		●		●	
BULBEX®/ LS/TL			●	●		●		●			
MONOBOLT®						●		●		●	
MULTI-GRIP			●	●		●		●			
PULL-THRU (PT)		●									
Q RIVET			●	●		●		●		●	
T-LOK®					●			●			
T Rivet						●		●			
AVSEAL® II				●			●			●	●

***Note**: For details on the nose equipment please refer to the accessories manual.*

2.3 PACKAGE CONTENTS

This package contains:

PB2500-######	Qty
BATTERY PACK	**
CHARGER	**
SA NOSEPIECE, 4	1pc
SA NOSEPIECE, 5	1pc
JAW PUSHER ASSEMBLY, 4	1pc
JAW PUSHER ASSEMBLY, 5	1pc
INSTRUCTION MANUAL	1pc

PB3400-JP183#	Qty
BATTERY PACK	**
CHARGER	1pc
SA NOSEPIECE, 8F	1pc
SA NOSEPIECE, 8P	1pc
SA NOSE HOUSING	1pc
SCREW WRENCH	1pc
INSTRUCTION MANUAL	1pc

PB3400-NA####	Qty
BATTERY PACK	**
CHARGER	**
SA NOSEPIECE, 8M	**
SCREW WRENCH	1pc
INSTRUCTION MANUAL	1pc

PB3400-QW,GB,XE,XD####	Qty
BATTERY PACK 2.0Ah or 4.0Ah	**
CHARGER	**
SCREW WRENCH	1pc
INSTRUCTION MANUAL	1pc

* The quantity and type of Li-Ion Battery Packs depends on Model Number and region sold. Contact your local reseller for details and options

** If the Model Number purchased is a bare tool then only the Cordless Installation Tool will be supplied with a standard set of 4.8mm[3/16"] for PB2500, 6.4mm[1/4"] for PB3400 Open End Nose Equipment installed.

2.4 MAIN COMPONENTS LIST *(for complete tool explosion and Bill of Material please see service manual)*

ProSet® PB2500 drawing can be found inside the **front cover**
ProSet® PB3400 drawing can be found inside the **back cover**

A	Nose pieces	N	Charger
B	Nose housing	O	Battery charger connection
C	Nose housing nut	P	Jaw guide
D	Collector lock	Q	Jaws
E	Collector shutter	R	Jaw pusher assembly
E2	Quick release collector	S	Jaw pusher spring
F	Hook accessory attachment	T	Pulling head
H	Exhaust vent	U	Front clutch or Jaw case lock
I	Handle	W	Collector space
J	Switch	Y	Rivet
K	Battery pack	Z	Front end componets
L	Manual	AA	Mandrel guide
M	Charger lamp		

2.5 OPTIONAL ACCESSORIES

WARNING: Since accessories, other than those offered by POP®Avdel® have not been tested with this product, use of such accessories with this tool could be hazardous. To reduce the risk of injury, only POP®Avdel® recommended accessories should be used with this product. Consult your dealer for further information on the appropriate accessories.

WARNING: To reduce the risk of serious personal injury, disconnect battery pack before making any adjustments or removing/installing attachments or accessories.

For a complete list of nose equipment and other accessories available for the PB Series, please visit our website http://www.stanleyengineeredfastening.com/resource-center/document-library

www.irivet.ru

3. Tool Use & Set up

The PB Series of tools are designed for installation of STANLEY Engineered Fastening Blind Fasteners.

DO NOT use under wet conditions or in presence of flammable liquids or gases.

READ ALL SAFETY WARNINGS AND INSTRUCTIONS BEFORE PUTTING TOOL INTO SERVICE.

Electrical Safety
The electric motor has been designed for one voltage only. Always check that the battery pack voltage corresponds to the voltage on the rating plate. Also make sure that the voltage of your charger corresponds to that of your mains.

Your DEWALT® charger is double insulated in accordance with EN60335; therefore no earth wire is required.

Using an Extension Cable
An extension cord should not be used unless absolutely necessary. Use an approved extension cable suitable for the power input of your charger (see Technical Data). The minimum conductor size is 1 mm2; the maximum length is 30 m. When using a cable reel, always unwind the cable completely.

Before Use

- Select relevant size nose equipment and install
- Ensure that the battery is fully charged
- Insert Battery Pack into the tool
- Quickly pull and release the trigger to set the tool to the home position.

4. Operating Instructions

Always wear approved hearing and eye protections at all times when using installation equipment.

WARNING: Before adjusting tool, always remove the battery pack.

4.1. NOSE EQUIPMENT
ProSet® PB2500 drawing can be found inside the **front cover**
ProSet® PB3400 drawing can be found inside the **back cover**

Mounting the nosepiece (fig. 7).

- Select the correct nosepiece for the rivet to be installed. Reference the Accessories Manual for appropriate nose equipment.
- Tighten the nosepiece (A) into the nose housing (B) by turning it clockwise using 11mm and 21mm spanners(PB2500) and 23mm and 27mm or 14mm and 23mm spanners(PB3400)

Mounting the jaw pusher and tail guide

PB2500 (fig. 4 & 5)

- Select the correct jaw pusher or jaw pusher assembly (R) that matches the Nose Piece selected. Reference the Accessories Manual for appropriate nose equipment.
- Insert jaw pusher (R) into jaw pusher spring (S).
- Reassemble jaw set (Q) and jaw guide (P) onto front clutch (U)

NOTE: *Do NOT use spanners to mount jaw guide (P) onto front clutch (U). Manual tightening of Jaw guide (P) is enough to lock onto front clutch (U)*

PB3400 (fig. 4 & 5)

- Select the correct jaw pusher assembly (R) and Mandrel guide (AA) that matches the Nose Piece selected. Reference the Accessories Manual for appropriate nose equipment.
- Insert mandrel guide (AA) into pulling head (T)
- Insert jaw pusher asembly (R) into jaw pusher spring (S)
- Reassemble jaw set (Q) and jaw guide (P) onto Pulling head (T)

NOTE: *Do NOT use spanners to mount jaw guide (P) onto front clutch or jaw case lock (U). Manual tightening of Jaw guide (P) is enough to lock onto front clutch or jaw case lock (U)*

4.2. CHARGERS

Your tool uses a DEWALT®/POP® Avdel® charger. Be sure to read all safety instructions before using your charger. The charger requires no adjustment and is designed to be as easy as possible to operate.

Charging Procedure (fig. 2)

- Plug the charger into an appropriate outlet before inserting the battery pack. (Refer to the Charger Specifications in Section 2)
- Insert the battery pack (K) into the charger, making sure the pack is fully seated in the charger. The red (charging) light will blink continuously indicating that the charging-process has started.
- The completion of charge will be indicated by the red light remaining ON continuously. The pack is fully charged and may be used at this time or left in the charger.

NOTE*: To ensure maximum performance and life of Li-Ion battery packs, charge the battery pack fully before first use.*

Charging Process

Refer to the table below for the state of charge of the battery pack.

Charge indicators:		
	charging	
	fully charged	
	hot/cold pack delay*	

*The red light will continue to blink, but a yellow indicator light will be illuminated during this operation. Once the battery has reached an appropriate temperature, the yellow light will turn off and the charger will resume the charging procedure.
This charger will not charge a faulty battery pack. The charger will indicate faulty battery by refusing to light.

NOTE: *This could also mean a problem with a charger.*
If the charger indicates a problem, take the charger and battery pack to be tested at an authorised service centre.

Hot/Cold Pack Delay
When the charger detects a battery that is too hot or too cold, it automatically starts a hot/cold pack delay, suspending charging until the battery has reached an appropriate temperature. The charger then automatically switches to the pack charging mode. This feature ensures maximum battery life. A cold battery pack will charge at about half the rate of a warm battery pack. The battery pack will charge at that slower rate throughout the entire charging cycle and will not return to maximum charge rate even if the battery warms.

Lithium-Ion Battery Packs
STANLEY Engineered Fastening PB Series Li-Ion tools are designed with an Electronic Protection System that will protect the battery against overloading, overheating or deep discharge. The tool will automatically turn off if the Electronic Protection System engages. If this occurs, place the Li-Ion battery on the charger until it is fully charged.

4.3 BATTERY PACKS

Your tool is designed to work specifically with DEWALT®/POP® Avdel® 18V/20V max Li-Ion battery packs.

Inserting and Removing the Battery Pack from the Tool (fig. 3)

NOTE: *For best results, make sure your battery pack is fully charged. The tool will shut off without warning when the battery is fully discharged.*

TO INSTALL THE BATTERY PACK INTO THE HANDLE

- Align the battery pack (K) with the rails inside the tool's handle (fig. 3).
- Slide it into the handle until the battery pack is firmly seated in the tool and ensure that it does not disengage.

TO REMOVE THE BATTERY PACK FROM TO THE HANDLE

- Press battery release button and firmly pull the battery pack out of the tool handle.
- Insert battery pack into the charger as described in the charger section for this manual.

Storage Recommendations

- The best storage place is one that is cool and dry away from direct sunlight and excess heat or cold. For optimum battery performance and life, store battery packs at room temperature when not in use.
- For long storage, it is recommended to store a fully charged battery pack in a cool, dry place out of the charger for optimal results.

NOTE: *Battery packs should not be stored completely depleted of charge. The battery pack will need to be recharged before use.*

5. OPERATING PROCEDURE

WARNING: Always observe the safety instructions and applicable regulations.

WARNING: To reduce the risk of serious personal injury, disconnect battery pack before making any adjustments or removing/installing attachments or accessories.

WARNING: To reduce the risk of serious personal injury, ALWAYS use proper hand position.

WARNING: To reduce the risk of serious personal injury, **ALWAYS** hold securely in anticipation of a sudden reaction.

5.1 PROPER HAND POSITION

Proper hand position requires one hand on the main handle (I) fig. 1.

5.2. TOOL OPERATION

Installing a blind rivet (fig. 8)

To install a blind rivet

- Place the blind rivet (Y) in the nose piece (A)
- Position the tool (fig.9)
- Pull and hold the switch (J) until the rivet is fully set in the application **(fig. 10)**.
- When the blind rivet (Y) has been set completely, release the switch (J). The tool will return to its initial position automatically. The mandrel is automatically dropped into the mandrel collector (W).

If you release the switch (J) before the end of the setting stroke, the tool will immediately return to its initial position. If the blind rivet (Y) has not been set completely, repeat the previous steps.

Reset function (fig.9)

If the tool does not move to its initial position after releasing the switch or stops during the setting stroke, reset the tool to home by quickly pulling and releasing the switch (J). If this does not resolve the issue, remove the battery, re-insert and then repeat the prior step. If the issue persists, contact your local service representative.

Emptying the mandrel collector (W) (fig. 6)

The mandrel collector is used to collect the waste mandrels. The mandrel collector must be emptied depending on the size of the blind rivets used.

Nom. Rivet Dia.	Approx. Capacity (PB2500)	Approx. Capacity (PB3400)
2.4 mm [3/32“]	600	Not applicable
3.2 mm [1/8“]	360	Not applicable
4.0 mm [5/32“]	200	Not applicable
4.8 mm [3/16“]	150	190
6.4 mm [1/4“]	Not applicable	100

- Tilt the tool back to allow all waste mandrels to fall into the mandrel collector.
- Open the mandrel collector (W) by sliding the Collector Lock (D) towards the nose housing nut (C) and raise the cover (E).
- Empty the waste mandrels into an appropriate recycling container or waste bin
- To close the mandrel collector (W), lower the cover (E) until the Collector Lock (D) clicks into place.

Optional Quick-Release mandrel collector (E2) (fig. 6a)

When using the optional **Quick-Release** mandrel collector accessory with the PB Series tools, the mandrel collector can be removed as follows:

- Tilt the tool back to allow all waste mandrels to fall into the mandrel collector (E2).
- Grab mandrel collector (E2) with one hand and disengage Collector Lock (D) with index finger.
- Pull the mandrel collector (E2) up and away from the tool, tilting the collector slightly back to prevent mandrels from falling out.
- To replace the collector, slide it back into the tool with the opening facing the front of the tool.
- Push the collector down until you hear the Collector Lock (D) click into place.

6. SERVICING THE TOOL

6.1. MAINTENANCE FREQUENCY

Item	**Frequency**
General Tool Inspection	Daily
Clean & lubricate Nose Equipment	5,000 rivets
Clean & grease Ball Screw and Thrust Bearing	50,000 rivets*
*Recommend contacting authorized service centre	

6.2. CLEANING

ALWAYS wear approved eye protection at all times when cleaning equipment

Tool Exterior
Keep the brushless motor exhaust vent openings (H) free from dust and dirt. If necessary, use a soft, moist cloth to remove dust and dirt from the exhaust vents. Blow dirt and dust out of the main power tool housing with dry air as often as dirt is seen collecting in and around the exhaust vents (H).

WARNING: Wear approved eye protection and approved dust mask when performing this procedure.

WARNING: Never use solvents or other harsh chemicals for cleaning the non-metallic parts of the tool. These chemicals may weaken the materials used in these parts. Use a cloth dampened only with water and mild soap. Never let any liquid get inside the tool; never immerse any part of the tool into a liquid.

Cleaning the Nose Equipment (fig. 4 & 5)

- Loosen the nose housing nut (C). Remove the nose housing (B).
- Press the front clutch or Jaw case lock (U) and loosen the jaw guide (P). Release the front clutch or Jaw case lock (U).
- Remove the jaws (Q) and the jaw pusher (R).
- Remove the spring (S) and Mandrel guide(AA)
- Clean the inside of the nose housing (B) using a dry cloth.
- Clean the jaws (Q) and the jaw pusher (R) using a dry cloth. If necessary, replace the jaws (Q) and the jaw pusher (R) and Mandrel guide(AA)
- Clean the pulling head (T) using a dry cloth.
- Apply grease to the inside of the jaw guide (P) where the jaws (Q) make contact. A Molybdenum Disulphide based grease is recommended.
- Mount the spring (S) and Mandrel guide(AA)
- Mount the jaw pusher(R) and the jaws (Q)
- Press front clutch (U) and tighten the jaw guide (P). Release front clutch or Jaw case lock (U).
- Mount the nose housing (B). Tighten the nose housing nut (C).
- Perform tool reset function to ensure the tool is at the initial home position as described in section 5.2

Charger Cleaning Instructions

WARNING: Shock hazard. Disconnect the charger from the AC outlet before cleaning.

Dirt and grease may be removed from the exterior of the charger using a cloth or soft non-metallic brush. **DO NOT** use water or any cleaning solutions.

6.3 SPARE PARTS – TOOLS

For spare parts we refer you to the specific service manuals which you can find on our website at http://www.stanleyengineeredfastening.com/resource-center/document-library

6.4. RECHARGEABLE BATTERY PACK

This long life battery pack must be recharged when it fails to produce sufficient power on jobs which were easily done before. At the end of its technical life, discard it with due care for our environment:

- Run the battery pack down completely, then remove it from the tool.
- Li-Ion cells are recyclable. Take them to your dealer or a local recycling station. The collected battery packs will be recycled or disposed of properly.

6.5. PROTECTING THE ENVIRONMENT

Separate collection. This product must not be disposed of with normal household waste.

Should you find one day that your POP®Avdel® product needs replacement, or if it is of no further use to you, do not dispose of it with household waste. Make this product available for separate collection. Separate collection of used products and packaging allows materials to be recycled and used again. Re-use of recycled materials helps prevent environmental pollution and reduces the demand for raw materials.

Local regulations may provide for separate collection of electrical products from the household, at municipal waste sites or by the retailer when you purchase a new product. You can check the location of your nearest authorised repair agent by contacting your local POP®Avdel® office at the address indicated in this manual. Alternatively, a list of authorised POP®Avdel® repair agents and full details of our after-sales service and contacts are available on the Internet at:
www.StanleyEngineeredFastening.com

www.irivet.ru

7. EC-Declaration of Conformity

Original

We, **Avdel UK Limited; Stanley House, Works Road, Letchworth Garden City, Hertfordshire, SG6 1JY UNITED KINGDOM,** declare under our sole responsibility that the product:

Description	POP®Avdel® battery tool for blind rivets
Brand/Model	ProSet® PB2500 or ProSet® PB3400
Serial No.	

to which this declaration relates is in conformity with the following standard:

2006/42/EC	**The Machinery Directive** Statutory Instruments 2008 No 1597 - The Supply of Machinery (Safety) Regulations refers.
2014/30/EU	**The Electromagnetic Compatibility (EMV) Regulations Directive**
2011/65/EU	**RoHS Restriction of Hazardous Substances**

and standards:

ISO 12100:2010		
EN62841-1:2015		

Technical documentation is compiled in accordance with Annex 1, section 1.7.4.1, in accordance with 2006/42/EC.

Manufacturer:

Naito Nobuharu
Senior Manager, R&D Engineering
STANLEY Engineered Fastening, Nippon POP Rivets and Fasteners Ltd., Noyori-cho Hosoda, Toyohashi, Aichi 441-8540 JAPAN

Signature	
Place of issue	**Japan**
Date of issue	**30. 10. 2016**

Authorised Representative:

A. K. Seewraj
Technology Manager – EU Blind Fastening
Avdel UK Limited; Stanley House, Works Road, Letchworth Garden City, Hertfordshire, SG6 1JY UNITED KINGDOM

CE	This machinery is in conformity with Machinery Directive 2006/42/EC.

8. PROTECT YOUR INVESTMENT!

8.1. POP®AVDEL® RIVET TOOL WARRANTY

STANLEY Engineered Fastening warrants that all power tools have been carefully manufactured and that they will be free from defect in material and workmanship under normal use and service for a period of one (1) year.

We will extend the warranty on your tool (excluding batteries and charger) from one (1) year to two (2) years when you register your tool online. (Ref. Section 8.2 at the bottom of this page.)

This rivet tool warranty applies to the first time purchaser of the tool for original use only.

Exclusions:

Normal wear and tear.

Periodic maintenance, repair and replacement parts due to normal wear and tear are excluded from coverage.

Abuse & Misuse.

Defect or damage that results from improper operation, storage, misuse or abuse, accident or neglect, such as physical damage are excluded from coverage.

Unauthorized Service or Modification.

Defects or damages resulting from service, testing adjustment, installation, maintenance, alteration or modification in any way by anyone other than STANLEY Engineered Fastening, or its authorized service centres, are excluded from coverage.

All other warranties, whether expressed or implied, including any warranties of merchantability or fitness for purpose are hereby excluded.

Should this tool fail to meet the warranty, promptly return the tool to our factory authorized service centre location nearest you. For a list of POP®Avdel® Authorized Service Centres in the US or Canada, contact us at our toll free number (877)364 2781.

Outside the US and Canada, visit our website **www.StanleyEngineeredFastening.com** to find your nearest STANLEY Engineered Fastening location.

STANLEY Engineered Fastening will then replace, free of charge, any part or parts found by us to be defective due to faulty material or workmanship, and return the tool prepaid. This represents our sole obligation under this warranty. In no event shall STANLEY Engineered Fastening be liable for any consequential or special damages arising out of the purchase or use of this tool.

8.2. REGISTER YOUR BLIND RIVET TOOL ONLINE

To register your warranty online, visit us http://www.stanleyengineeredfastening.com/popavdel-powertools/warranty-card. Thank you for choosing a STANLEY Engineered Fastening's POP®Avdel® Brand tool.

www.irivet.ru

STANLEY Engineered Fastening
4 Shelter Rock Lane
Danbury, Connecticut,
United States, 06810
Tel. 877 364 2781
Fax 800 225 5614

Holding your world together®

Find your closest STANLEY Engineered Fastening location on
www.stanleyengineeredfastening.com/contact
For an authorized distributor nearby please check

www.stanleyengineeredfastening.com/econtact/distributors

Manual Number	Issue	C/N
TRM00201	C	171116-1

© 2019 Stanley Black & Decker, Inc.

Avdel®, Avex®, Avibulb®, Avinox®, Avseal®, Bulbex®, Hemlok®, Interlock®, Klamp-Tite®, Monobolt®, POP®, ProSet®, Stavex® and T-Lok® are registered trademarks of Stanley Black & Decker, Inc. and its affiliates. The names and logos of other companies mentioned herein may be trademarks of their respective owners. Data shown is subject to change without prior notice as a result of continuous product development and improvement policy. Your local STANLEY Engineered Fastening representative is at your disposal should you need to confirm latest information.

www.irivet.ru