Rivettatrice oleopneumatica per inserti filettati M4÷M12.

Riveteuse oléopneumatique

Hydropneumatic tool for threaded inserts M4÷M12.

Ölipneumatischem Werkzeug für Blindnietmuttern M4÷M12.

PESO - WEIGHT - GEWICHT	kg 2,5

M	ALLUMINIO ALUMINIUM ALUMINIUM	ACCIAIO STEEL STAHL	INOX INOX INOX
M4	•	•	•
M5	•	•	•
M6	•	•	•
M8	•	•	•
M10	•	•	•
M12	•	•	•

POS.	COD.	QT.	DESCRIZIONE	DENOMINATION	PARTS LIST	BEZEICHNUNG	€ cad.
1	10625	1	Tirante m4	Tirant m4	Tie rod m4	Gewindedorn m4	17,60
1	10626	1	Tirante m5	Tirant m5	Tie rod m5	Gewindedorn m5	17,60
1	10627	1	Tirante m6	Tirant m6	Tie rod m6	Gewindedorn m6	17,60
1	10628	1	Tirante m8	Tirant m8	Tie rod m8	Gewindedorn m8	17,60
1	10629	1	Tirante m10	Tirant m10	Tie rod m10	Gewindedorn m10	17,60
1	10630	1	Tirante m12	Tirant m12	Tie rod m12	Gewindedorn m12	17,60
1	10631	1	Adattatore m4	Adaptateur m4	Adaptor m4	Mundstück m4	14,00
1	10632	1	Adattatore m5	Adaptateur m5	Adaptor m5	Mundstück m5	14,00
1	10633	1	Adattatore m6	Adaptateur m6	Adaptor m6	Mundstück m6	14,00
1	10634	1	Adattatore m8	Adaptateur m8	Adaptor m8	Mundstück m8	14,00
1	10635	1	Adattatore m10	Adaptateur m10	Adaptor m10	Mundstück m10	14,00
1	10636	1	Adattatore m12	Adaptateur m12	Adaptor m12	Mundstück m12	14,00
2	10637	1	Testa m4	Tête m4	Head m4	Kopf m4	12,00
2	10638	1	Testa m5	Tête m5	Head m5	Kopf m5	12,00
2	10639	1	Testa m6	Tête m6	Head m6	Kopf m6	12,00
2	10640	1	Testa m8	Tête m8	Head m8	Kopf m8	12,00
2	10641	1	Testa m10	Tête m10	Head m10	Kopf m10	12,00
2	10642	1	Testa m12	Tête m12	Head m12	Kopf m12	12,00
3-6	10643	1	Valvola frontale completa	Soupape complète frontale	Front-end complete valve	Mundstückaufnahme komplett	56,00
7	10644	1	Unita' di sicurezza	Unité de sureté	Unit of safety	Verriegelung	12,00
8	10645	1	Sostegno molla	Support de ressort	Spring support	Spiralfederhalter	6,00
9	10646	1	Molla	Ressort	Spring	Druckfeder	3,00
10	10647	1	Perno cilindirico 3,0x6	Goupille cylindrique 3,0x6	Cylindrical pin 3,0x6	Zylinderstifte 3,0x6	2,00
11	10648	1	Dado – chiusura	Curseur – fermeture	Nut - closure	Kontermutter	1,60
12	10649	1	O-ring 14..3/2.4, asta pistone idraulico	Joint torique 14..3/2.4, piston hydraulique tringle	O-ring 14..3/2.4, rod hydraulic piston	O-ring 14..3/2.4, hydraulische kolbenstange	4,00
13	10650	1	O-ring 20/1, valvola frontale	Joint torique 20/1, soupape frontale	O-ring 20/1, front-end valve	O-ring 20/1, mundstückaufnahme	3,00
14	10651	1	Pistone idraulico completo	Piston hydraulique complète	Complete hydraulic piston	Hydraulikkolben komplett	640,00
15	10652	1	O-ring 18/2.2, asta pistone idraulico	Joint torique 18/2.2, piston hydraulique tringle	O-ring 18/2.2, rod hydraulic piston	O-ring 18/2.2, hydraulische kolbenstange	4,00
16	10653	1	Sigillo ant. 26/18-6, asta pistone idraulico	Cachet frontale 26/18-6, piston hydraulique tringle	Front seal 26/18-6, rod hydraulic piston	Manschette 26/18-6, hydraul. kolbenstange	25,00
17	10654	1	Anello ammortizzatore, pistone idraulico	Anneau d'étouffoir, piston hydraulique	Damper ring, hydraulic piston	Stoßring hydraulikkolben	28,00
18	10655	1	Vite tappo m 5x8	Vis taraudeuse M5x8	Tapping screw M5x8	Schraub Verschluß M5x8	2,00
19	10656	1	O-ring 4/1.5	Joint torique 4/1.5	O-ring 4/1.5	O-ring 4/1.5	4,80
20	10657	1	Pendente	Pendant	Pendant	Aufhängebügel	2,60
21	10658	1	Corpo idraulico	Corps hydraulique	Hydraulic body	Hydraulikgehäuse	330,00
22	10659	1	Sigillo anteriore 34/22-9,4, pistone idraulico	Cachet frontale 34/22-9.4, piston hydraulique	Front seal 34/22-9,4, hydraulic piston	Manschette 34/22-9.4 hydraulikkilben	25,00
23	10660	1	Anello di guida 34/22/2.5 teflon	Anneau avant 34/22/2.5 téflon	Leading ring 34/22/2.5 teflon	Führungsring 34/22/2.5 teflon	6,00
24	10661	1	O-ring 28/3, pistone idraulico	Joint torique 28/3, piston hydraulique	O-ring 28/3, hydraulic piston	O-ring 28/3, hydraulikkolben	6,00
25	10662	1	O-ring 36/2, tubo di avvitamento anteriore	Joint torique 36/2, tube de rotation frontale	O-ring 36/2, front-end spin tube	O-ring 36/2 hintere verschraubung	6,00
26	10663	1	Canotto porta motore	Porte motor	Motor holding case	Motorhalter	36,00
27	10664	1	Protezione contenitore	Protection de corp	Body protectoin	Schutzscheibe	11,20
28	10665	1	Perno cilindrico 4,0x10	Goupille cylindrique 4,0x10	Cylindrical pin 4,0x10	Zylinderstifte 4,0x10	3,00
29	10666	1	Molla	Ressort	Spring	Feder	48,00
30	10667	1	Molla	Goupille de compression	Compression pin	Druckfeder	6,40
31	10669	1	Tubo di avvitamento anteriore	tube de rotation frontale	Front-end spin tube	Hintere verschraubung	45,00
32	10670	1	Anello per spina di compressione	Anneau pour Goupille de compression	Ring for compression pin	Ring für druckfeder	3,60
33	10671	1	Silenziatore	Silencieux	Silencer	Schalldämpfer	5,00
34	10672	1	Tasto di avvio	Poussoir start	Starting button	Drucktaster	2,40
35	10673	1	Sigillo ant. 22/12-7, asta pistone pneum.	Cachet frontal22/12-7, piston hydraulique tringle	Front.end seal 22/12-7, rod pneum. piston	Manschette 22/12-7 pneum. kolbenstange	28,80
36	10674	1	O.R.	Ecrou à œil principale	Principal ring nut	Führungsring	5,60
37	10675	1	Ghiera inferiore	Ecrou à œil inferieur	Lower ring nut	Bodenring	24,20
38	10676	1	Pistone pneumatico	Piston pneumatique	Pneumatic piston	Pneumatikkolben	84,00
39	10677	1	Cilindro pneumatico	Cylindre pneumatique	Pneumatic cylinder	Pneumatikzylinder	164,00
40	10678	1	Ghiera di copertura	Ecrou à œil couverture	Covering ring nut	Verchlußplatte	86,50
41	10679	1	O-ring 14/2	Joint torique 14/2	O-ring 14/2	O-ring 14/2	12,00
42	10680	1	O-ring 89/4, pistone pneumatico	Joint torique 89/4, piston hydraulique	O-ring 89/4, pneumatic piston	O-ring 89/4 pneumatikkolben	12,00
43	10681	1	Attacco presa pressione	Pièce de fixation pression	Pressure fastening	Verbindungshülse für manometer	9,60
44	10682	1	O-ring 10/1.5	Joint torique 10/1.5	O-ring 10/1.5	O-ring 10/1.5	3,60
45	10683	1	Presa pressione	Accouplement pression	Pressure engagement	Manometer	30,00

IRIVET
Компания АЙРИВЕТ
ООО "АЙ-РИВЕТ"
www.irivet.ru
Тел: +7(495) 135 4201
Тел: +7 916 922 6789
Почта: order@irivet.ru
SACTO
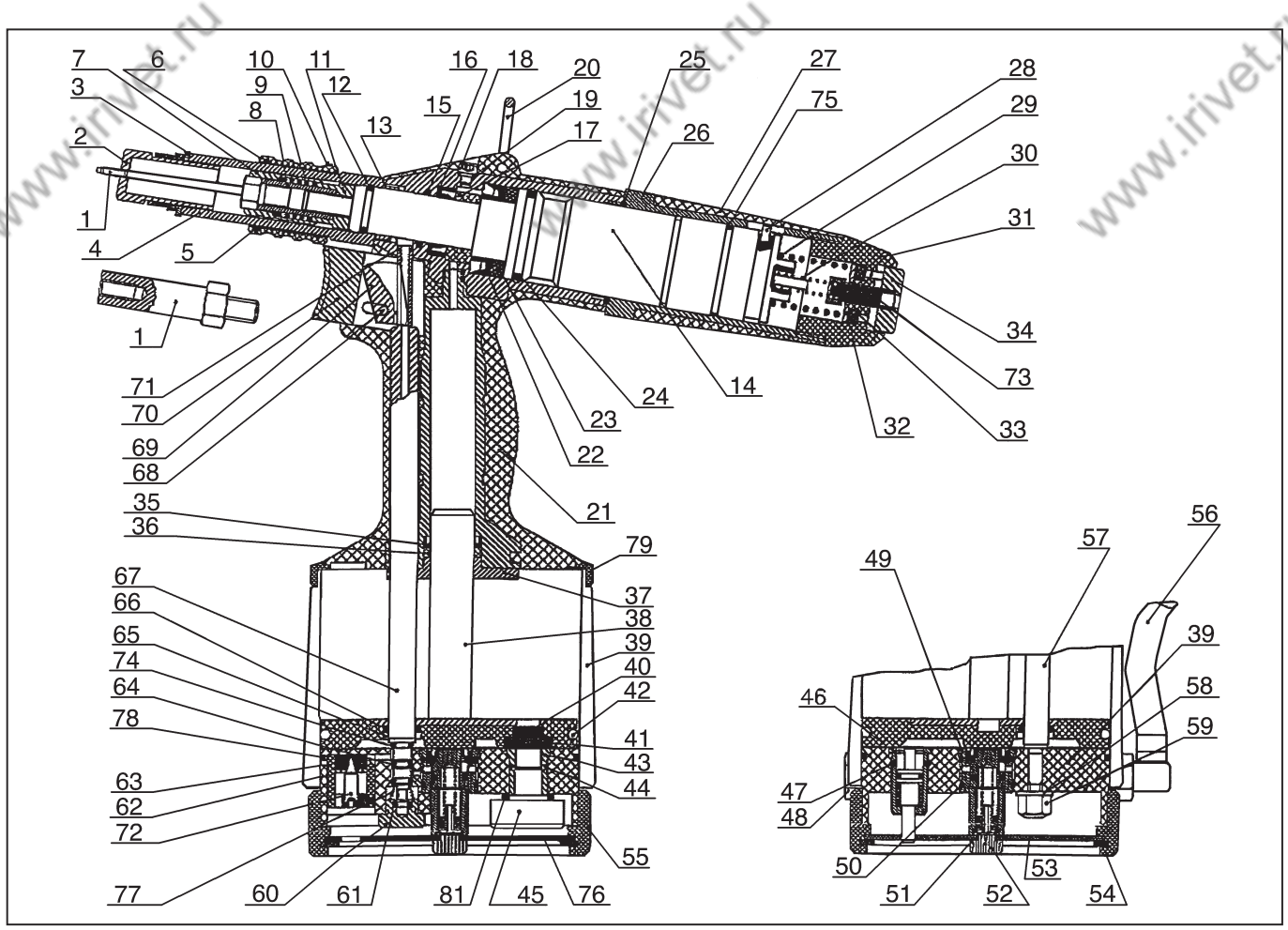
POS.	COD.	QT.	DESCRIZIONE	DENOMINATION	PARTS LIST	BEZEICHNUNG	€ cad.
46	10684	1	Indicatore livello olio	Indicateur niveau huile	Oil level indicator	Ölstandanzeiger	38,80
47	10685	1	O-ring 10/1.5	Joint torique 10/1.5	O-ring 10/1.5	O-ring 10/1.5	4,00
48	10686	1	Valvola rilievo pressione	Evaluation pression soupape	Valve pressure survey	Überdruckventil	29,00
49	10687	1	Valvola di regolazione pressione	Soupape régulation er pression	Regulation and pressure valve	Druckregelventig	25,00
50	10688	2	O-ring 18/1.5	Joint torique 18/1.5	O-ring 18/1.5	O-ring 18/1.5	4,00
51	10689	1	Ghiera di ritenuta 6 din 471	Ecrou à œil 6din 471	Ring nut 6 din 471	Sicherungsring 6 din 471	6,40
52	10690	1	Vite regolazione pressione	Poussoir régulation er pression	Regulation and pressure button	Einstellschraube druck	9,00
53	10691	1	Copertura	Couverture	Covering	Abschirmung	4,40
54	10692	1	Ghiera di ritenuta	Ecrou à œil	Ring nut	Sicherungsring	6,40
55	10693	1	Ghiera inferiore	Ecrou à œil inferieur	Lower ring nut	Bodenring	25,00
56	10694	1	Attacco connessione 90°	Tringlerie connexion 90˚	90° connection linkage	Drehkupplung 90°	48,00
57	10695	2	Dado di connessione	Curseur de connexion	Connection nut	Führungsbolzen	16,00
58	10696	2	Rondella in rame per dado di connessione	Rondelle en cuivre pour curseur de connexion	Copper washer for connection nut	Kupfer scheibe	2,00
59	10697	2	Perno tappo m6 per dado di connessione	Tête tige m6 pour curseur de connexion	Pin cap m6 for connection nut	Überwurfmutter m6	3,00
60	10698	1	Perno valvola dado inferiore	Tige soupape curseur inferieur	Pin valve lower nut	Bolzen unter ventilstange	11,00
61	10699	1	O-ring 4/2, perno valvola	Joint torique 4/2, soupape tige	O-ring 4/2, pin valve	O-ring 4/2, ventilstange	3,60
62	10800	1	Valvola per valvola ad ago	Soupape pour pointeau	Valve for needle valve	Buchse für einstellventil	32,00
63	10801	1	Scarico	Décharge	Unloading	Schalldämpfer	4,00
64	10802	2	O-ring 4/2	Joint torique 4/2	O-ring 4/2	O-ring 4/2	3,60
65	10803	4	Vite aggiustamento – diam. 14	Vis de réglage – diam. 14	Adjustment screw – diam. 14	Schraube durchmesser 14	6,40
66	10804	3	O-ring 10/2	Joint torique 10/2	O-ring 10/2	O-ring 10/2	3,60
67	10805	1	Perno valvola	Soupape tige	Pin valve	Ventilstange	38,20
68	10806	1	Perno cilindrico 3,0x20	Tige cylindrique 3,0x20	Cylindrical pin 3,0x20	Zylynderstifte 3,0x20	4,00
69	10807	1	Grilletto eccentrico	Déclencheur excentrique	Eccentric trigger	Exzentrische drucktaster	4,00
70	10808	1	Grilletto	Déclencheur	Trigger	Drucktaster	6,50
71	10809	1	O-ring 4/1, perno valvola	Joint torique 4/1, soupape tige	O-ring 4/1, pin valve	O-ring 4/1 ventilstange	2,40
72	10810	1	Valvola ad ago per tempo di ritorno	Pointeau pour temps retour	Needle valve for retorn time	Einstellventil dauer linkslauf	7,00
73	10811	1	Vite superiore m6x16	Vis supérieur m6x16	Upper screw m6x16	Innensechskantschraube m6x16	2,40
74	10812	1	O-ring 4/2,2, perno valvola	Joint torique 4/2.2, soupape tige	O-ring 4/2,2, pin valve	O-ring 4/2.2 ventilstange	3,60
75	10813	1	O-ring 30/2	Joint torique 30/2	O-ring 30/2	O-ring 30/2	3,60
76	10814	1	Fondello serigrafato	Culot	Bottom	Bondenscheibe	20,00
77	10815	1	Valvola compressione	Soupape de compression	Compression valve	Druckfeder unter ventilstange	21,60
78	10816	1	Vite	Vis	Screw	Schraube	2,40
79	10817	1	Corpo	Corp	Body	körper	12,00
81	10818	1	O-ring	O-ring	O-ring	O-ring	3,00
82	10819	1	Siringa	Seringue	Syringe	Spritze	9,00
83	10820	1	Bottiglia olio	Bouteille huile	Oil bottle	Öl Fläsche	3,00
84	10821	1	Chiave brugola	Vis Allen	Allen screw	Innensechskantschlüssel	4,00