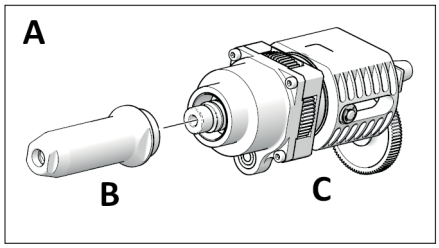

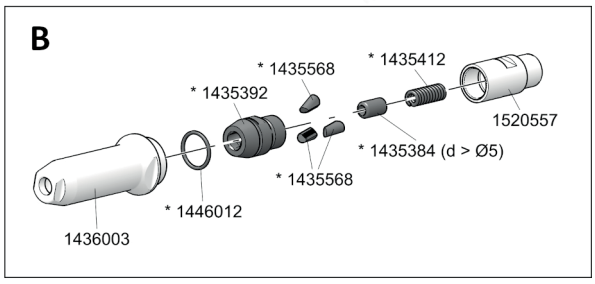

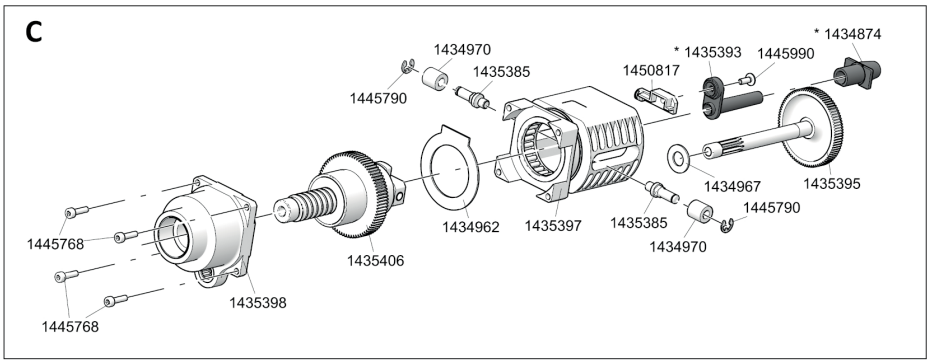

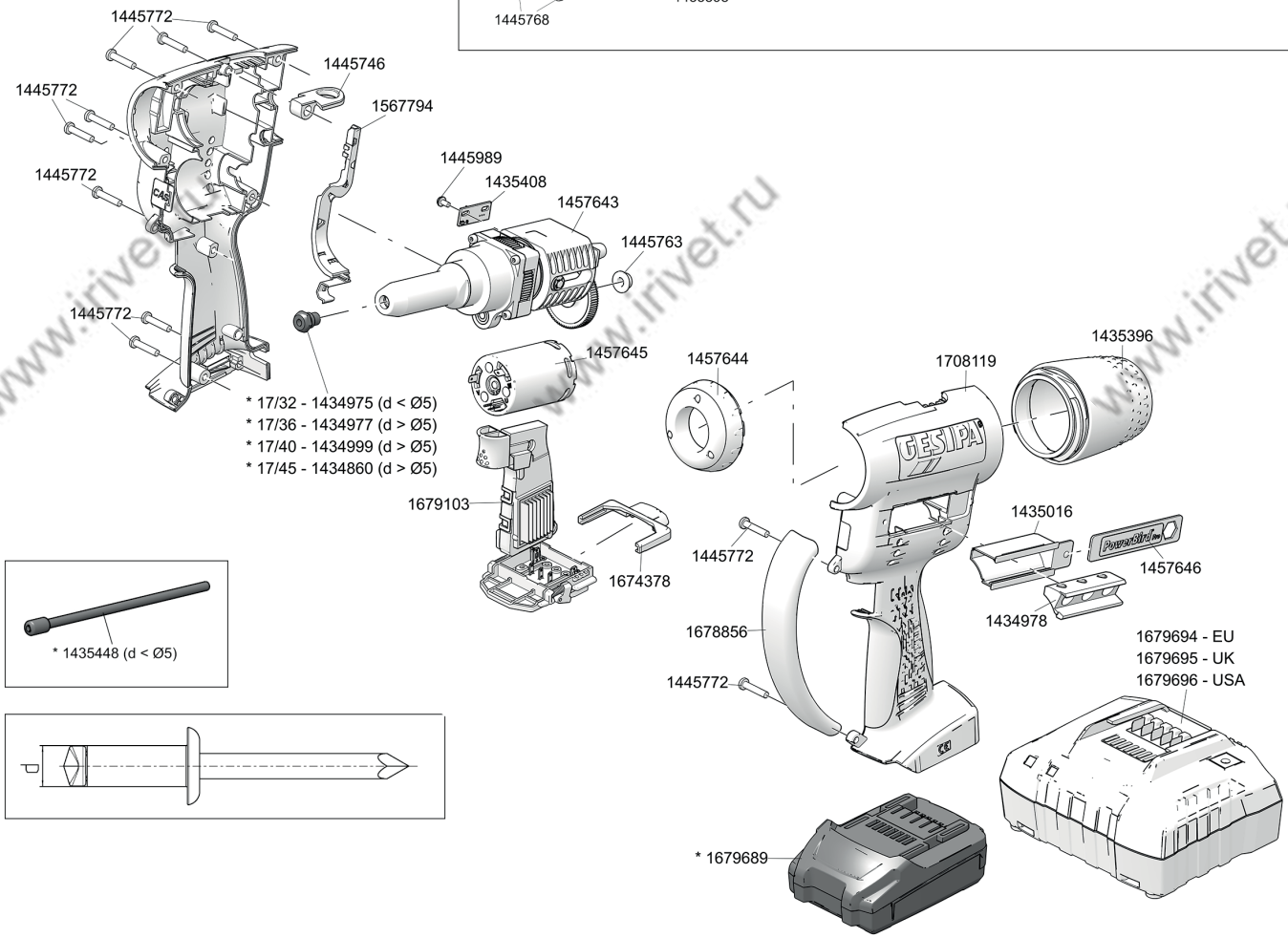

www.irivet.ru

IRIVET
Компания АЙРИВЕТ
ООО "АЙ-РИВЕТ"
www.irivet.ru
Тел: +7 (495) 135 4201
Тел: +7 916 922 6789
Почта: order@irivet.ru

No.	
143 4874*	Tube short
143 4962	Washer
143 4967	Washer
143 4970	Sintered metal roller
143 4975*	Nosepiece 17/32
143 4977*	Nosepiece 17/36
143 4999*	Nosepiece 17/40
143 4860*	Nosepiece 17/45
143 4978	Magazine insert
143 5016	Nosepiece magazine
143 5384*	Jaw Pusher (for BN > Ø 5)
143 5385	Pin
143 5392*	Jaw housing
143 5393*	Channel tube
143 5395	Pinion shaft Pro Gold Edition
143 5396	Spent mandrel container, complete
143 5397	Bearing cage
143 5398	Bearing, complete
143 5406	Ball screw drive
143 5408	Hall pcb
143 5412*	Compression spring
143 5448*	Jaw Pusher (for BN < Ø 5)
143 5568*	Jaws (3 parts)

No.	
143 6003	Steel head sleeve
144 5746	Hanger Pro Gold Edition
144 5763	Sintered-metal bushing
144 5768	Screw
144 5772	Screw long
144 5790	Lock washer
144 5989	Screw
144 5990	Screw
144 6012*	O ring
145 0817	Magnetic holder
145 7643	Drive unit Pro GE complete
145 7644	Light, complete
145 7645	Motor
145 7646	Key PowerBird ° Pro complete
152 0557	Adapter
156 7794	Cable duct
167 9689	Battery 2.0 Ah
167 4378	Locking slider
170 8119	Housing
167 8856	Tool bar
167 9103	E control

www.irivet.ru